aiwa

aiwa SERVICE

HV-FX6500

SERVICE MANUAL

STEREO VIDEO
CASSETTE RECORDER

• BASIC VIDEO MECHANISM: D27UP4LRH 048A

• TYPE: K,EH,Z

SIMPLE MANUAL

• Replace this Service Manual with ”Revision Publishing” when it is issued.

S/M Code No. 09–986–285–00A

ELECTRICAL MAIN PARTS LIST - 1/10

NOTE: The characters in the suffix column indicate the part usage.

6500K .....XX.....A.....
6500Z .....XX.....B.....
6500EH .....XX.....C.....

REF.NO		PARTS NO.	KANRI NO.	DESCRIPTION	SUFFIX
		87-067-703-010		TAPPING SCREW, BVT2+3-10	ABC
C	1	87-A10-374-010		CAP,M/P 0.1-275 K RMR	ABC
C	6	87-A10-480-090		CAP,CER 4700P-250 M E KH	ABC
C	7	87-A10-480-090		CAP,CER 4700P-250 M E KH	ABC
C	9	87-A10-490-080		CAP,M/P 0.022-630 K MMC	ABC
C	8	87-A10-898-090		CAP,E 56-400 SMG 0.43A(RMS)	ABC
C	19	87-010-101-080		CAP, ELECT 220-16	ABC
C	15	87-010-198-080		CAP, CHIP 0.022	ABC
C	14	87-010-221-080		CAP, ELECT 470-10V	ABC
C	18	87-010-387-080		CAP,E 470-25 SME	ABC
C	16	87-010-866-080		CAP, ELECT 10-63	ABC
C	13	87-012-391-080		CAP,CER 220P-2K K B	ABC
C	10	87-016-501-080		CAP,E 47-35 SXE	ABC
C	17	87-A10-493-080		CAP,E 1000-25 KMF	ABC
C	25	87-010-178-080		CHIP CAP 1000P	ABC
C	26	87-010-190-080		S CHIP F 0.01	ABC
C	21	87-010-247-080		CAP, ELECT 100-50V	ABC
C	23	87-010-375-080		CAP,E 330-10 SME	ABC
C	20	87-010-401-080		CAP, ELECT 1-50V	ABC
C	28	87-010-805-080		CAP, S 1-16	ABC
C	29	87-010-805-080		CAP, S 1-16	ABC
C	22	87-A10-491-080		CAP,E 2200-10 KMF	ABC
C	30	87-010-198-080		CAP, CHIP 0.022	ABC
D	6	87-020-465-080		DIODE,1SS133 (110MA)	ABC
D	5	87-020-465-080		DIODE,1SS133 (110MA)	ABC
D	1	87-070-173-010		DIODE,S1WBA60	ABC
D	3	87-A40-172-080		DIODE,EG01Z	ABC
D	4	87-A40-367-080		DIODE,EU01	ABC
D	8	87-A40-367-080		DIODE,EU01	ABC
D	2	87-A40-368-080		DIODE,EG01C	ABC
D	15	87-020-465-080		DIODE,1SS133 (110MA)	ABC
D	12	87-070-274-080		DIODE,1N4003 SEM	ABC
D	19	87-A40-367-080		DIODE,EU01	ABC
D	10	87-A40-367-080		DIODE,EU01	ABC
D	11	87-A40-369-090		DIODE,RN3Z	ABC
D	22	87-020-465-080		DIODE,1SS133 (110MA)	ABC
D	20	87-A40-184-090		DIODE,RK34(F)	ABC
D	21	87-A40-353-080		ZENER,HZS33-3	ABC
D	23	87-A40-470-080		DIODE,1SS254	ABC
F	1	87-035-454-010		FUSE,1.6A 250V T W/C	ABC
FB	1	87-003-223-080		FERRITE BEAD BL02RN2	ABC
FC	2	87-A90-160-080		FUSE CLAMP,FC 51F	ABC
FC	1	87-A90-160-080		FUSE CLAMP,FC 51F	ABC
IC	3	87-A20-389-010		IC,NJM7809FA	ABC
IC	1	87-A20-619-010		IC,STR-F6535	ABC
IC	2	87-A20-649-080		IC,HA17431VP	ABC
ICF	1	87-001-132-080		ICP-N38	ABC
ICF	4	87-001-196-080		FUSE, ICP-N10	ABC
ICF	2	87-001-211-080		ICP-N50	ABC
ICF	5	87-002-330-080		ICP-N5	ABC
J	1	87-A60-021-010		JACK,AC E HJC-028	ABC
L	2	87-A50-180-080		COIL,22UH K LHL10	ABC
L	1	87-A50-193-080		COIL,10UH K LHL10	ABC
LF	3	87-A90-470-010		FLTR,33MH SS10V-03330	ABC
LF	2	87-A90-470-010		FLTR,33MH SS10V-03330	ABC
LF	1	87-A90-491-010		FLTR,20UH SU9VD-07020	ABC
PS	2	87-A90-717-010		P-COUPLER,PC123FY2	ABC
PS	1	87-A90-717-010		P-COUPLER,PC123FY2	ABC
PT	1	88-JU1-630-010		PT,E 8JU-1 SWT	ABC
Q	5	87-026-227-080		CHIP-TR,DTA114EK	ABC
Q	4	87-026-235-080		CHIP-TR,DTC114EK	ABC
Q	6	87-026-235-080		CHIP-TR,DTC114EK	ABC
Q	8	87-026-235-080		CHIP-TR,DTC114EK	ABC
Q	3	87-026-235-080		CHIP-TR,DTC114EK	ABC
Q	9	87-A30-216-080		TR,2SA933AS(R)	ABC
Q	2	87-A30-217-010		TR,2SB1436(R)	ABC
Q	7	87-A30-218-080		TR,2SB1237(Q)	ABC
Q	1	87-A30-218-080		TR,2SB1237(Q)	ABC
Q	17	87-026-223-080		TR,DTC143TK	ABC
Q	13	87-026-227-080		CHIP-TR,DTA114EK	ABC
Q	11	87-026-227-080		CHIP-TR,DTA114EK	ABC
Q	10	87-026-235-080		CHIP-TR,DTC114EK	ABC
Q	15	87-026-235-080		CHIP-TR,DTC114EK	ABC
Q	16	87-A30-217-010		TR,2SB1436(R)	ABC
Q	12	87-A30-220-080		TR,2SC1741AS(R)	ABC
Q	14	87-A30-220-080		TR,2SC1741AS(R)	ABC
R	6	87-022-567-090		RES,M/O 68K-2W J	ABC
R	3	87-A00-290-090		RES,M/F 100K-2W J	ABC
R	11	87-A00-412-090		RES,M/F 0.75-2W J	ABC
R	26	87-025-365-080		RES,M/F 680-1/6WJ F	ABC
R	25	87-025-365-080		RES,M/F 680-1/6WJ F	ABC
R	24	87-A00-279-080		RES,M/F 75-1/6W F	ABC
R	41	87-022-565-090		RES,M/O 47K-1W J	ABC
R	50	87-029-115-010		FUSE RESISTER 10 OHM 1/4W	ABC

R	52	87-029-132-090	RESTOR FUSE 4.7-1/4W	ABC.....
R	51	87-029-374-010	RES,FUSE 47-1/4W	ABC.....
C	108	87-010-196-080	CHIP CAPACITOR,0.1-25	ABC.....
C	103	87-010-196-080	CHIP CAPACITOR,0.1-25	ABC.....
C	109	87-010-196-080	CHIP CAPACITOR,0.1-25	ABC.....
C	105	87-010-196-080	CHIP CAPACITOR,0.1-25	ABC.....
C	104	87-010-263-040	CAP,E 100-10	ABC.....
C	106	87-015-684-040	CAP,E 47-16 7L	ABC.....
C	107	87-015-684-080	CAP,E 47-16 7L	ABC.....
C	117	87-010-196-080	CHIP CAPACITOR,0.1-25	ABC.....
C	118	87-010-196-080	CHIP CAPACITOR,0.1-25	ABC.....
C	114	87-010-196-080	CHIP CAPACITOR,0.1-25	ABC.....
C	115	87-010-196-080	CHIP CAPACITOR,0.1-25	ABC.....
C	119	87-015-684-080	CAP,E 47-16 7L	ABC.....
C	116	87-015-684-080	CAP,E 47-16 7L	ABC.....
C	120	87-010-112-080	CAP, ELECT 100-16V	ABC.....
C	122	87-010-182-080	C-CAP,S 2200P-50 B	ABC.....
C	121	87-010-196-080	CHIP CAPACITOR,0.1-25	ABC.....
C	127	87-010-197-080	CAP, CHIP 0.01 DM	ABC.....
C	126	87-010-197-080	CAP, CHIP 0.01 DM	ABC.....
C	129	87-010-197-080	CAP, CHIP 0.01 DM	ABC.....
C	128	87-010-197-080	CAP, CHIP 0.01 DM	ABC.....
C	138	87-010-079-080	100UF,6.3V ELECTROLYTIC	ABC.....
C	135	87-010-186-080	CAP,CHIP 4700P	ABC.....
C	130	87-010-197-080	CAP, CHIP 0.01 DM	ABC.....
C	137	87-015-677-080	CAP,E 100-6.3 7L	ABC.....
C	139	87-016-369-080	C-CAP,S 0.033-25 B K	ABC.....
C	143	87-010-075-040	CAP,E 10-16 5L	ABC.....
C	144	87-010-075-040	CAP,E 10-16 5L	ABC.....
C	141	87-010-079-080	100UF,6.3V ELECTROLYTIC	ABC.....
C	148	87-010-176-080	C-CAP,S 680P-50 SL	ABC.....
C	145	87-010-187-080	CAP CHIP S5600P	ABC.....
C	147	87-010-196-080	CHIP CAPACITOR,0.1-25	ABC.....
C	142	87-010-197-080	CAP, CHIP 0.01 DM	ABC.....
C	140	87-015-677-080	CAP,E 100-6.3 7L	ABC.....
C	146	87-015-696-080	CAP,E 2.2-50 7L	ABC.....
C	157	87-010-178-080	CHIP CAP 1000P	ABC.....
C	159	87-010-196-080	CHIP CAPACITOR,0.1-25	ABC.....
C	150	87-010-311-080	CAP 12P	ABC.....
C	151	87-010-311-080	CAP 12P	ABC.....
C	155	87-010-372-080	CAP,E 2200-6.3 SME	ABC.....
C	154	87-010-494-080	CAP ELECT GAS 1/50	ABC.....
C	158	87-015-677-080	CAP,E 100-6.3 7L	ABC.....
C	167	87-010-196-080	CHIP CAPACITOR,0.1-25	ABC.....
C	168	87-010-196-080	CHIP CAPACITOR,0.1-25	ABC.....
C	163	87-010-197-080	CAP, CHIP 0.01 DM	ABC.....
C	160	87-010-197-080	CAP, CHIP 0.01 DM	ABC.....
C	165	87-010-197-080	CAP, CHIP 0.01 DM	ABC.....
C	164	87-010-197-080	CAP, CHIP 0.01 DM	ABC.....
C	179	87-010-178-080	CHIP CAP 1000P	ABC.....
C	171	87-010-318-080	C-CAP,S 47P-50 CH	ABC.....
C	173	87-010-318-080	C-CAP,S 47P-50 CH	ABC.....
C	172	87-010-318-080	C-CAP,S 47P-50 CH	ABC.....
C	170	87-010-550-040	CAP,E 100-6.3 GAS	ABC.....
C	174	87-018-119-080	CAP, CER 100P-50V	ABC.....
C	175	87-018-119-080	CAP, CER 100P-50V	ABC.....
C	180	87-010-178-080	CHIP CAP 1000P	ABC.....
CN	105	87-A60-257-010	CONN,9P V SD-52556	ABC.....
CN	106	87-A60-258-010	CONN,2P V TMC-E02X	ABC.....
CN	109	87-A60-260-010	CONN,6P V TKC-G06P	ABC.....
CN	107	87-A60-262-010	CONN,5P V HPC 0750	ABC.....
CN	104	87-A60-405-010	CONN,4P V BGE TKX-P04P-X1	ABC.....
CN	102	87-A60-610-010	CONN,7P V BLK 5085 PLUG	ABC.....
CN	101	87-A60-610-010	CONN,7P V BLK 5085 PLUG	ABC.....
CN	103	87-A60-614-010	CONN,17P V BLK 5085 PLUG	ABC.....
CN	108	87-A60-695-010	CONN,8P V TKC-G08P	ABC.....
CN	113	87-099-668-010	CONN,9P TUC-P 9P-B1	ABC.....
CN	111	87-099-842-010	CONN,13P 5085 PLUG	ABC.....
CN	112	87-A60-189-010	CONN,16P V TUC-P16P-B1	ABC.....
CN	110	87-A60-610-010	CONN,7P V BLK 5085 PLUG	ABC.....
D	109	87-017-079-080	ZENER,HZS4A3	ABC.....
D	101	87-017-110-080	ZENER,HZS7C2	ABC.....
D	105	87-070-274-080	DIODE,1N4003 SEM	ABC.....
D	104	87-070-274-080	DIODE,1N4003 SEM	ABC.....
D	102	87-070-274-080	DIODE,1N4003 SEM	ABC.....
D	103	87-070-274-080	DIODE,1N4003 SEM	ABC.....
D	107	87-070-288-010	LED,GL380	ABC.....
D	106	87-A40-470-080	DIODE,1SS254	ABC.....
D	108	87-A40-470-080	DIODE,1SS254	ABC.....
D	110	87-A40-470-080	DIODE,1SS254	ABC.....
HL	101	86-JPS-206-010	HLDR,PHOTO TR2	ABC.....
HL	102	86-JPS-207-010	HLDR,R/S SUPPLY2	ABC.....
HL	103	86-JPS-207-010	HLDR,R/S SUPPLY2	ABC.....
IC	103	87-002-427-010	IC,BA6209N-	ABC.....
IC	104	87-020-881-080	IC,NJM78L05A	ABC.....
IC	102	87-A20-618-040	C-IC,S-24C04AFJA-TB-01	ABC.....
IC	105	87-A20-965-040	C-IC,S-80842ANNP-ED6	ABC.....
IC	101	88-JU1-654-010	C-IC,CXP88624-104Q	ABC.....
L	106	87-003-045-080	CHOKE COIL, 220K	ABC.....
L	104	87-005-130-080	COIL,10UH	ABC.....
L	103	87-005-429-080	COIL,5.6UH K FLR50	ABC.....
L	101	87-005-432-080	COIL,10UH	ABC.....

ELECTRICAL MAIN PARTS LIST - 3/10

L	102	87-005-432-080	COIL,10UH	ABC.....
PS	101	87-A90-244-010	SNSR,GP1S94	ABC.....
PS	102	87-A90-244-010	SNSR,GP1S94	ABC.....
Q	106	87-026-210-080	CHIP-TR,DTC144EK	ABC.....
Q	108	87-A30-141-010	P-TR,PN268NC-R	ABC.....
Q	109	87-A30-141-010	P-TR,PN268NC-R	ABC.....
Q	105	87-A30-219-080	TR,2SB1443(Q)	ABC.....
Q	107	89-324-122-080	TR,2SC2412K	ABC.....
Q	115	89-109-521-080	TR,2SA952 (0.6W)	ABC.....
Q	110	89-324-122-080	TR,2SC2412K	ABC.....
Q	117	89-324-122-080	TR,2SC2412K	ABC.....
Q	116	89-324-122-080	TR,2SC2412K	ABC.....
R	112	87-029-142-010	RES 3.3-1/2WJ	ABC.....
SW	102	87-A90-207-010	SW,PUSH 1-1-1 MPU10105MMBO	ABC.....
SW	101	87-A90-208-010	SW,PUSH 1-1-1 MPU10400MLB0	ABC.....
X	101	87-A70-090-080	VIB,XTAL 16MHZ AT-49	ABC.....
C	806	87-010-178-080	CHIP CAP 1000P	ABC.....
C	809	87-010-178-080	CHIP CAP 1000P	ABC.....
C	804	87-010-196-080	CHIP CAPACITOR,0.1-25	ABC.....
C	802	87-010-196-080	CHIP CAPACITOR,0.1-25	ABC.....
C	803	87-010-196-080	CHIP CAPACITOR,0.1-25	ABC.....
C	807	87-010-196-080	CHIP CAPACITOR,0.1-25	ABC.....
C	801	87-010-374-040	CAP,E 47-10	ABC.....
C	805	87-010-374-040	CAP,E 47-10	ABC.....
C	808	87-010-374-080	CAP, ELECT 47-10V	ABC.....
C	818	87-010-194-080	CAP, CHIP 0.047	.BC.....
C	812	87-010-196-080	CHIP CAPACITOR,0.1-25	ABC.....
C	819	87-010-197-080	CAP, CHIP 0.01 DM	ABC.....
C	813	87-010-374-080	CAP, ELECT 47-10V	ABC.....
C	815	87-010-401-040	CAP,E 1-50 SME	ABC.....
C	817	87-010-401-040	CAP,E 1-50 SME	ABC.....
C	816	87-010-401-080	CAP, ELECT 1-50V	ABC.....
C	810	87-010-408-080	CAP, ELECT 47-50V	ABC.....
C	811	87-012-368-080	C-CAP,S 0.1-50 F	ABC.....
C	820	87-010-196-080	CHIP CAPACITOR,0.1-25	ABC.....
CN	801	87-099-016-010	CONN,14P 6216V	ABC.....
D	801	87-A40-470-080	DIODE,1SS254	ABC.....
FB	801	87-008-372-080	FILTER, EMI BL OIRNI	ABC.....
IC	801	87-A20-371-080	IC,KA33V	ABC.....
L	801	87-005-440-080	COIL,47UH FLR50	ABC.....
L	802	87-005-440-080	COIL,47UH FLR50	ABC.....
Q	802	87-026-210-080	CHIP-TR,DTC144EK	ABC.....
Q	808	87-026-210-080	CHIP-TR,DTC144EK	ABC.....
Q	807	87-A30-216-080	TR,2SA933AS(R)	ABC.....
Q	801	87-A30-219-080	TR,2SB1443(Q)	ABC.....
Q	809	89-324-122-080	TR,2SC2412K	ABC.....
Q	805	89-324-122-080	TR,2SC2412K	ABC.....
Q	803	89-324-122-080	TR,2SC2412K	ABC.....
Q	804	89-324-122-080	TR,2SC2412K	ABC.....
Q	806	89-324-122-080	TR,2SC2412K	ABC.....
Q	811	87-026-210-080	CHIP-TR,DTC144EK	ABC.....
Q	810	87-A30-216-080	TR,2SA933AS(R)	ABC.....
TU	801	88-JU1-674-010	TU UNIT,TMLB2-109A I	A.....
TU	801	88-JU1-675-010	TU UNIT,TMLG2-115A BG	.BC.....
C	303	87-010-148-080	CAP, CHIP S 75P SL	ABC.....
C	309	87-010-196-080	CHIP CAPACITOR,0.1-25	ABC.....
C	304	87-010-196-080	CHIP CAPACITOR,0.1-25	ABC.....
C	301	87-010-197-080	CAP, CHIP 0.01 DM	ABC.....
C	307	87-010-316-080	C-CAP,S 33P-50 CH	ABC.....
C	306	87-012-153-080	C-CAP,S 120P-50 CH	ABC.....
C	308	87-015-674-080	CAP 22U-6.3V	ABC.....
C	305	87-015-697-080	CAP,E 3.3-50 7L	ABC.....
C	312	87-010-180-080	C-CER 1500P	ABC.....
C	318	87-010-197-080	CAP, CHIP 0.01 DM	ABC.....
C	317	87-010-197-080	CAP, CHIP 0.01 DM	ABC.....
C	315	87-010-198-080	CAP, CHIP 0.022	ABC.....
C	313	87-010-314-080	C-CAP,S 22P-50V	ABC.....
C	311	87-010-400-080	CAP, ELECT 0.47-50V	ABC.....
C	316	87-010-400-080	CAP, ELECT 0.47-50V	ABC.....
C	319	87-010-405-080	CAP, ELECT 10-50V	ABC.....
C	310	87-016-369-080	C-CAP,S 0.033-25 B K	ABC.....
C	329	87-010-198-080	CAP, CHIP 0.022	ABC.....
C	321	87-010-263-080	CAP, ELECT 100-10V	ABC.....
C	324	87-010-400-080	CAP, ELECT 0.47-50V	ABC.....
C	326	87-010-402-080	CAP, ELECT 2.2-50V	ABC.....
C	327	87-010-403-080	CAP, ELECT 3.3-50V	ABC.....
C	328	87-010-403-080	CAP, ELECT 3.3-50V	ABC.....
C	325	87-010-405-080	CAP, ELECT 10-50V	ABC.....
C	322	87-010-545-080	CAP, ELECT 0.22-50V	ABC.....
C	323	87-A10-468-080	CAP,E 10-10 M 7L BP SRA	ABC.....
C	330	87-010-197-080	CAP, CHIP 0.01 DM	ABC.....
C	337	87-010-197-080	CAP, CHIP 0.01 DM	ABC.....
C	338	87-010-197-080	CAP, CHIP 0.01 DM	ABC.....
C	336	87-010-198-080	CAP, CHIP 0.022	ABC.....
C	333	87-012-154-080	C-CAP,S 150P-50 CH	ABC.....
C	339	87-015-677-080	CAP,E 100-6.3 7L	ABC.....
C	332	87-015-692-080	CAP,E 0.22-50 7L	ABC.....
C	331	87-015-694-080	CAP,E 0.47-50 7L	ABC.....
C	335	87-015-695-080	CAP,E 1-50 7L	ABC.....
C	349	87-010-181-080	CAP,CHIP S 1800P	ABC.....
C	344	87-010-196-080	CHIP CAPACITOR,0.1-25	ABC.....
C	343	87-010-196-080	CHIP CAPACITOR,0.1-25	ABC.....

C	342	87-010-312-080	C-CAP,S 15P-50 CH	ABC.....
C	347	87-010-314-080	C-CAP,S 22P-50V	ABC.....
C	348	87-010-315-080	C-CAP,S 27P-50 CH	ABC.....
C	345	87-010-315-080	C-CAP,S 27P-50 CH	ABC.....
C	346	87-010-316-080	C-CAP,S 33P-50 CH	ABC.....
C	341	87-010-319-080	C-CAP,S 56P-50 CH	ABC.....
C	357	87-010-196-080	CHIP CAPACITOR,0.1-25	ABC.....
C	356	87-010-197-080	CAP, CHIP 0.01 DM	ABC.....
C	359	87-010-197-080	CAP, CHIP 0.01 DM	ABC.....
C	350	87-010-312-080	C-CAP,S 15P-50 CH	ABC.....
C	351	87-010-315-080	C-CAP,S 27P-50 CH	ABC.....
C	353	87-010-320-080	CHIP CAP 68P	ABC.....
C	355	87-012-155-080	C-CAP 180P-50CH	ABC.....
C	354	87-012-157-080	C-CAP,S 330P-50 CH	ABC.....
C	365	87-010-154-080	CAP CHIP 10P	ABC.....
C	364	87-010-154-080	CAP CHIP 10P	ABC.....
C	367	87-010-196-080	CHIP CAPACITOR,0.1-25	ABC.....
C	369	87-010-314-080	C-CAP,S 22P-50V	ABC.....
C	368	87-010-319-080	C-CAP,S 56P-50 CH	ABC.....
C	362	87-010-319-080	C-CAP,S 56P-50 CH	ABC.....
C	360	87-010-319-080	C-CAP,S 56P-50 CH	ABC.....
C	361	87-010-320-080	CHIP CAP 68P	ABC.....
C	366	87-012-145-080	CAP, CHIP S 270P CH	ABC.....
C	363	87-012-153-080	C-CAP,S 120P-50 CH	ABC.....
C	376	87-010-196-080	CHIP CAPACITOR,0.1-25	ABC.....
C	374	87-010-196-080	CHIP CAPACITOR,0.1-25	ABC.....
C	378	87-010-197-080	CAP, CHIP 0.01 DM	ABC.....
C	375	87-010-197-080	CAP, CHIP 0.01 DM	ABC.....
C	379	87-010-198-080	CAP, CHIP 0.022	ABC.....
C	370	87-010-317-080	C-CAP,S 39P-50 CH	ABC.....
C	371	87-012-157-080	C-CAP,S 330P-50 CH	ABC.....
C	377	87-015-676-080	ELECTROLYTIC CAPACITOR, 47U-6.	ABC.....
C	389	87-010-148-080	CAP, CHIP S 75P SL	ABC.....
C	387	87-010-178-080	CHIP CAP 1000P	ABC.....
C	384	87-010-196-080	CHIP CAPACITOR,0.1-25	ABC.....
C	386	87-010-196-080	CHIP CAPACITOR,0.1-25	ABC.....
C	388	87-010-197-080	CAP, CHIP 0.01 DM	ABC.....
C	385	87-010-263-080	CAP, ELECT 100-10V	ABC.....
C	383	87-012-155-080	C-CAP 180P-50CH	ABC.....
C	380	87-015-677-080	CAP,E 100-6.3 7L	ABC.....
C	393	87-010-145-080	C-CAP,S 1P-50 CH	ABC.....
C	394	87-010-154-080	CAP CHIP 10P	ABC.....
C	395	87-010-154-080	CAP CHIP 10P	ABC.....
C	391	87-010-196-080	CHIP CAPACITOR,0.1-25	ABC.....
C	392	87-010-196-080	CHIP CAPACITOR,0.1-25	ABC.....
C	398	87-010-197-080	CAP, CHIP 0.01 DM	ABC.....
C	399	87-010-248-080	CAP, ELECT 220-10V	ABC.....
C	390	87-010-314-080	C-CAP,S 22P-50V	ABC.....
C	397	87-010-401-080	CAP, ELECT 1-50V	ABC.....
C	408	87-010-148-080	CAP, CHIP S 75P SL	ABC.....
C	406	87-010-148-080	CAP, CHIP S 75P SL	ABC.....
C	402	87-010-196-080	CHIP CAPACITOR,0.1-25	ABC.....
C	405	87-010-198-080	CAP, CHIP 0.022	ABC.....
C	407	87-010-314-080	C-CAP,S 22P-50V	ABC.....
C	409	87-010-314-080	C-CAP,S 22P-50V	ABC.....
C	400	87-010-318-080	C-CAP,S 47P-50 CH	ABC.....
C	404	87-010-805-080	CAP, S 1-16	ABC.....
C	411	87-010-196-080	CHIP CAPACITOR,0.1-25	ABC.....
C	415	87-010-196-080	CHIP CAPACITOR,0.1-25	ABC.....
C	417	87-010-197-080	CAP, CHIP 0.01 DM	ABC.....
C	418	87-010-197-080	CAP, CHIP 0.01 DM	ABC.....
C	412	87-010-263-080	CAP, ELECT 100-10V	ABC.....
C	416	87-010-318-080	C-CAP,S 47P-50 CH	ABC.....
C	410	87-010-400-080	CAP, ELECT 0.47-50V	ABC.....
C	419	87-018-209-080	CAP, CER 0.1-50V	ABC.....
C	420	87-018-209-080	CAP, CER 0.1-50V	ABC.....
CN	303	87-A60-247-010	CONN,12P TUC-P12X-C1	ABC.....
CN	302	87-A60-607-010	CONN,7P H BLK 5085 RECE	ABC.....
CN	301	87-A60-613-010	CONN,17P H BLK 5085 RECE	ABC.....
D	301	87-A40-470-080	DIODE,1SS254	ABC.....
IC	301	87-A20-216-110	C-IC,HA118201CF	ABC.....
IC	302	87-A20-575-040	C-IC,MSM7470-79MS	ABC.....
IC	303	87-JU1-650-040	C-IC,LC74763M-9655-T	ABC.....
L	301	87-003-282-080	COIL,12UH	ABC.....
L	305	87-005-440-080	COIL,47UH FLR50	ABC.....
L	304	87-005-440-080	COIL,47UH FLR50	ABC.....
L	302	87-005-684-080	COIL,10UH	ABC.....
L	306	87-005-688-080	COIL,22UH	ABC.....
L	303	87-005-690-080	COIL,33UH	ABC.....
L	309	87-005-692-080	COIL,47UH	ABC.....
L	308	87-005-693-080	COIL,56UH	ABC.....
L	307	87-005-695-080	COIL,82UH	ABC.....
L	310	87-005-684-080	COIL,10UH	ABC.....
L	311	87-005-686-080	COIL,15UH	ABC.....
L	319	87-005-687-080	COIL 18UH	ABC.....
L	318	87-005-689-080	COIL,27UH JLF5.0S	ABC.....
L	314	87-005-693-080	COIL,56UH	ABC.....
L	315	87-005-698-080	COIL,150UH J LF5S	ABC.....
L	326	87-005-440-080	COIL,47UH FLR50	ABC.....
L	328	87-005-440-080	COIL,47UH FLR50	ABC.....
L	321	87-005-685-080	COIL,12UH	ABC.....
L	322	87-005-688-080	COIL,22UH	ABC.....

L	320	87-005-689-080	COIL,27UH JLF5.0S	ABC.....
L	327	87-005-694-080	COIL,68UH J LF5S	ABC.....
L	325	87-005-700-080	COIL,220UH	ABC.....
L	323	87-005-700-080	COIL,220UH	ABC.....
L	329	87-005-839-080	COIL,5.6UH G LF5.0S	ABC.....
L	330	87-005-440-080	COIL,47UH FLR50	ABC.....
Q	306	87-026-210-080	CHIP-TR,DTC144EK	ABC.....
Q	308	87-026-210-080	CHIP-TR,DTC144EK	ABC.....
Q	305	87-026-210-080	CHIP-TR,DTC144EK	ABC.....
Q	309	87-026-210-080	CHIP-TR,DTC144EK	ABC.....
Q	307	87-026-210-080	CHIP-TR,DTC144EK	ABC.....
Q	304	89-110-372-080	TR,2SA1037(140MHZ 200MW)	ABC.....
Q	303	89-324-122-080	TR,2SC2412K	ABC.....
Q	319	87-026-210-080	CHIP-TR,DTC144EK	ABC.....
Q	316	87-026-210-080	CHIP-TR,DTC144EK	ABC.....
Q	318	87-026-210-080	CHIP-TR,DTC144EK	ABC.....
Q	317	87-026-210-080	CHIP-TR,DTC144EK	ABC.....
Q	315	89-324-122-080	TR,2SC2412K	ABC.....
Q	313	89-324-122-080	TR,2SC2412K	ABC.....
Q	327	87-026-210-080	CHIP-TR,DTC144EK	ABC.....
Q	321	87-026-211-080	TR,DTA144EK	ABC.....
Q	320	87-026-211-080	TR,DTA144EK	ABC.....
Q	322	89-324-122-080	TR,2SC2412K	ABC.....
Q	326	89-324-122-080	TR,2SC2412K	ABC.....
Q	323	89-324-122-080	TR,2SC2412K	ABC.....
Q	329	89-324-122-080	TR,2SC2412K	ABC.....
Q	338	87-026-210-080	CHIP-TR,DTC144EK	ABC.....
Q	334	87-026-210-080	CHIP-TR,DTC144EK	ABC.....
Q	331	87-026-210-080	CHIP-TR,DTC144EK	ABC.....
Q	332	87-026-210-080	CHIP-TR,DTC144EK	ABC.....
Q	333	87-026-210-080	CHIP-TR,DTC144EK	ABC.....
Q	339	89-110-372-080	TR,2SA1037(140MHZ 200MW)	ABC.....
Q	330	89-110-372-080	TR,2SA1037(140MHZ 200MW)	ABC.....
Q	337	89-324-122-080	TR,2SC2412K	ABC.....
Q	340	89-110-372-080	TR,2SA1037(140MHZ 200MW)	ABC.....
Q	343	89-110-372-080	TR,2SA1037(140MHZ 200MW)	ABC.....
Q	341	89-110-372-080	TR,2SA1037(140MHZ 200MW)	ABC.....
Q	342	89-110-372-080	TR,2SA1037(140MHZ 200MW)	ABC.....
X	302	83-JU3-666-080	VIB,XTAL 17.73MHZ	ABC.....
X	301	87-A70-019-080	VIB,XTAL 4.43MHZ	ABC.....
C	853	87-010-220-080	C-CAP,S 0.018-25 B	ABC.....
C	851	87-010-322-080	C-CAP,S 100P-50 CH	ABC.....
C	859	87-010-382-080	CAP, ELECT 22-25V	ABC.....
C	858	87-010-404-080	CAP, ELECT 4.7-50V	ABC.....
C	852	87-010-405-080	CAP, ELECT 10-50V	ABC.....
C	854	87-010-989-080	C-CAP,S 2200P-50 CH	ABC.....
C	855	87-012-349-080	C-CAP,S 1000P-50 CH	ABC.....
C	862	87-010-196-080	CHIP CAPACITOR,0.1-25	ABC.....
C	867	87-010-196-080	CHIP CAPACITOR,0.1-25	ABC.....
C	865	87-010-196-080	CHIP CAPACITOR,0.1-25	ABC.....
C	861	87-010-197-080	CAP, CHIP 0.01 DM	ABC.....
C	869	87-010-374-080	CAP, ELECT 47-10V	ABC.....
C	860	87-010-382-080	CAP, ELECT 22-25V	ABC.....
C	864	87-015-695-040	E/CAP 1UF 50V TAPG	ABC.....
C	870	87-010-196-080	CHIP CAPACITOR,0.1-25	ABC.....
C	873	87-010-196-080	CHIP CAPACITOR,0.1-25	ABC.....
C	874	87-010-197-080	CAP, CHIP 0.01 DM	ABC.....
C	878	87-010-260-080	CAP, ELECT 47-25V	ABC.....
C	872	87-010-382-080	CAP, ELECT 22-25V	ABC.....
C	879	87-010-989-080	C-CAP,S 2200P-50 CH	ABC.....
C	875	87-010-989-080	C-CAP,S 2200P-50 CH	ABC.....
C	877	87-012-365-080	C-CAP,S 0.027-25VBK	ABC.....
C	882	87-010-260-080	CAP, ELECT 47-25V	ABC.....
C	880	87-010-322-080	C-CAP,S 100P-50 CH	ABC.....
IC	851	87-A20-572-040	C-IC,BA7795FS	ABC.....
L	851	87-005-398-080	COIL,8.2MH LHL06	ABC.....
L	853	87-005-432-080	COIL,10UH	ABC.....
L	852	87-005-440-080	COIL,47UH FLR50	ABC.....
L	854	88-JU1-672-010	COIL,BIAS K7-T3 FE	ABC.....
L	855	88-JU1-673-010	COIL,BIAS K7-T3 AE	ABC.....
Q	851	87-026-210-080	CHIP-TR,DTC144EK	ABC.....
Q	856	87-026-235-080	CHIP-TR,DTC114EK	ABC.....
Q	853	87-026-235-080	CHIP-TR,DTC114EK	ABC.....
Q	857	87-A30-099-080	TR,2SC3708S/T	ABC.....
Q	854	87-A30-099-080	TR,2SC3708S/T	ABC.....
Q	855	89-110-372-080	TR,2SA1037(140MHZ 200MW)	ABC.....
Q	852	89-110-372-080	TR,2SA1037(140MHZ 200MW)	ABC.....
C	558	87-010-197-080	CAP, CHIP 0.01 DM	ABC.....
C	553	87-010-382-080	CAP, ELECT 22-25V	ABC.....
C	551	87-015-681-080	CAP,E 10-16 7L	ABC.....
C	556	87-015-682-080	CAP,E 22-16 7L	ABC.....
C	552	87-015-682-080	CAP,E 22-16 7L	ABC.....
C	559	87-015-682-080	CAP,E 22-16 7L	ABC.....
C	557	87-015-688-080	CAP,E 4.7-35 7L	ABC.....
C	554	87-015-695-080	CAP,E 1-50 7L	ABC.....
C	550	87-018-134-080	CAPACITOR,TC-U 0.01-16	ABC.....
C	567	87-010-175-080	CAP 560P	ABC.....
C	563	87-010-184-080	CHIP CAPACITOR 3300P(K)	ABC.....
C	562	87-010-186-080	CAP,CHIP 4700P	ABC.....
C	565	87-010-197-080	CAP, CHIP 0.01 DM	ABC.....
C	561	87-010-197-080	CAP, CHIP 0.01 DM	ABC.....
C	569	87-010-374-080	CAP, ELECT 47-10V	ABC.....

C	564	87-015-676-080	ELECTROLYTIC CAPACITOR, 47U-6.	ABC.....
C	568	87-015-676-080	ELECTROLYTIC CAPACITOR, 47U-6.	ABC.....
C	566	87-015-677-080	CAP,E 100-6.3 7L	ABC.....
C	560	87-015-682-080	CAP,E 22-16 7L	ABC.....
C	577	87-010-184-080	CHIP CAPACITOR 3300P(K)	ABC.....
C	578	87-010-186-080	CAP,CHIP 4700P	ABC.....
C	573	87-010-197-080	CAP, CHIP 0.01 DM	ABC.....
C	570	87-010-197-080	CAP, CHIP 0.01 DM	ABC.....
C	576	87-010-197-080	CAP, CHIP 0.01 DM	ABC.....
C	579	87-010-382-080	CAP, ELECT 22-25V	ABC.....
C	572	87-010-805-080	CAP, S 1-16	ABC.....
C	571	87-015-695-080	CAP,E 1-50 7L	ABC.....
C	589	87-010-196-080	CHIP CAPACITOR,0.1-25	ABC.....
C	580	87-010-197-080	CAP, CHIP 0.01 DM	ABC.....
C	582	87-010-382-080	CAP, ELECT 22-25V	ABC.....
C	583	87-010-401-080	CAP, ELECT 1-50V	ABC.....
C	581	87-010-404-080	CAP, ELECT 4.7-50V	ABC.....
C	587	87-010-405-080	CAP, ELECT 10-50V	ABC.....
C	592	87-010-060-080	ELECTROLYTIC 100-16V	ABC.....
C	596	87-010-197-080	CAP, CHIP 0.01 DM	ABC.....
C	593	87-010-197-080	CAP, CHIP 0.01 DM	ABC.....
C	595	87-015-676-080	ELECTROLYTIC CAPACITOR, 47U-6.	ABC.....
C	591	87-015-681-080	CAP,E 10-16 7L	ABC.....
C	590	87-015-681-080	CAP,E 10-16 7L	ABC.....
C	599	87-018-134-080	CAPACITOR,TC-U 0.01-16	ABC.....
CN	551	87-099-840-010	CONN,13P 5085 RECE	ABC.....
CN	552	87-A60-607-010	CONN,7P H BLK 5085 RECE	ABC.....
IC	551	87-A20-938-010	C-IC,LA72631M	ABC.....
L	551	87-005-432-080	COIL,10UH	ABC.....
L	552	87-005-432-080	COIL,10UH	ABC.....
L	554	87-005-432-080	COIL,10UH	ABC.....
		88-JU1-680-010	FF-CABLE, 9P 1.25 90MM 30V	ABC.....
		88-JU1-682-010	FF-CABLE, 10P 1.25 180MM 30V	ABC.....
		88-JU1-684-010	FF-CABLE, 13P 1.25 90MM 60V	ABC.....
		88-JU1-686-010	FF-CABLE, 14P 1.25 110MM 30V	ABC.....
		88-JU1-688-010	FF-CABLE, 26P 1.25 90MM 60V	ABC.....
C	204	87-010-196-080	CHIP CAPACITOR,0.1-25	ABC.....
C	203	87-010-197-080	CAP, CHIP 0.01 DM	ABC.....
C	207	87-010-312-080	C-CAP,S 15P-50 CH	ABC.....
C	209	87-010-312-080	C-CAP,S 15P-50 CH	ABC.....
C	206	87-010-805-080	CAP, S 1-16	ABC.....
C	212	87-010-152-080	C-CAP,S 8P-50 CH	ABC.....
C	217	87-010-178-080	CHIP CAP 1000P	ABC.....
C	219	87-010-178-080	CHIP CAP 1000P	ABC.....
C	218	87-010-178-080	CHIP CAP 1000P	ABC.....
C	210	87-010-196-080	CHIP CAPACITOR,0.1-25	ABC.....
C	211	87-010-312-080	C-CAP,S 15P-50 CH	ABC.....
C	213	87-010-313-080	CAP, CHIP 18P	ABC.....
C	215	87-010-404-080	CAP, ELECT 4.7-50V	ABC.....
C	216	87-018-131-080	CAP, CER 1000P-50V	ABC.....
C	222	87-010-178-080	CHIP CAP 1000P	ABC.....
C	221	87-010-197-080	CAP, CHIP 0.01 DM	ABC.....
C	223	87-010-197-080	CAP, CHIP 0.01 DM	ABC.....
C	220	87-018-131-080	CAP, CER 1000P-50V	ABC.....
CN	204	87-099-197-010	CONN, 9P 6216 V	ABC.....
CN	202	87-A60-135-010	CONN,10P V FE	ABC.....
CN	203	87-A60-138-010	CONN,13P V FE	ABC.....
CN	201	87-A60-174-010	CONN,26P H FE	ABC.....
IC	202	87-A20-676-040	C-IC,S-80827ANNP-EDQ	ABC.....
IC	201	88-JU1-653-010	C-IC,CXP82960-102Q	.BC.....
IC	201	88-JU1-655-010	C-IC,CXP82960-103Q	A.....
L	201	87-005-684-080	COIL,10UH	ABC.....
X	202	87-030-364-010	VIB,XTAL 32.768K CT	ABC.....
X	201	87-A70-090-080	VIB,XTAL 16MHZ AT-49	ABC.....
C	708	87-010-176-080	C-CAP,S 680P-50 SL	ABC.....
C	709	87-010-176-080	C-CAP,S 680P-50 SL	ABC.....
C	707	87-010-196-080	CHIP CAPACITOR,0.1-25	ABC.....
C	705	87-010-196-080	CHIP CAPACITOR,0.1-25	ABC.....
C	702	87-010-196-080	CHIP CAPACITOR,0.1-25	ABC.....
C	701	87-015-677-080	CAP,E 100-6.3 7L	ABC.....
C	706	87-015-677-080	CAP,E 100-6.3 7L	ABC.....
C	703	87-015-677-080	CAP,E 100-6.3 7L	ABC.....
C	704	87-015-684-080	CAP,E 47-16 7L	ABC.....
C	712	87-010-176-080	C-CAP,S 680P-50 SL	ABC.....
C	710	87-010-318-080	C-CAP,S 47P-50 CH	ABC.....
C	751	87-015-695-080	CAP,E 1-50 7L	ABC.....
CN	704	87-099-346-010	CONN,8P 8283B/B H R	ABC.....
CN	701	87-A60-134-010	CONN,9P V FE	ABC.....
CN	702	87-A60-158-010	CONN,10P H FE	ABC.....
CN	703	87-A60-174-010	CONN,26P H FE	ABC.....
CN	751	87-A60-138-010	CONN,13P V FE	ABC.....
CN	752	87-A60-618-010	CONN,8P H WHT 8283 B/BPLUG	ABC.....
D	709	87-017-350-080	LED,SEL1550CM	ABC.....
D	704	87-017-350-080	LED,SEL1550CM	ABC.....
D	703	87-070-418-010	LED,LN66A	ABC.....
D	701	87-A40-343-010	LED,SIR-56ST3F TRP	ABC.....
D	702	87-A40-343-010	LED,SIR-56ST3F TRP	ABC.....
D	705	87-A90-531-080	LED,SEL6915A	ABC.....
D	707	87-A90-531-080	LED,SEL6915A	ABC.....
D	708	87-A90-531-080	LED,SEL6915A	ABC.....
D	706	87-A90-531-080	LED,SEL6915A	ABC.....
D	751	87-017-092-080	ZENER,HZS5C2	ABC.....

FL	701	88-JU1-652-010	FL,10-MT-110GK	ABC.....
HL	703	86-JU1-201-010	HLDR,SENSOR A	ABC.....
HL	702	86-JU1-201-010	HLDR,SENSOR A	ABC.....
HL	701	88-JU1-208-010	HLDR,FL	ABC.....
HL	751	88-JU1-201-010	HLDR,JOG	ABC.....
IC	701	87-070-083-010	IC,GP1U281X	ABC.....
J	701	87-A60-369-010	JACK,PIN 3P 15 VT B	ABC.....
L	701	87-005-849-080	COIL,10UH(CECS)	ABC.....
Q	704	87-026-210-080	CHIP-TR,DTC144EK	ABC.....
Q	707	87-026-211-080	TR,DTA144EK	ABC.....
Q	705	87-026-211-080	TR,DTA144EK	ABC.....
Q	706	87-026-211-080	TR,DTA144EK	ABC.....
Q	703	87-026-211-080	TR,DTA144EK	ABC.....
Q	701	89-418-580-080	TR,2SD1858 TV2	ABC.....
S	703	87-A90-164-080	SW,TACT SKQAB(N)	ABC.....
S	702	87-A90-164-080	SW,TACT SKQAB(N)	ABC.....
S	705	87-A90-164-080	SW,TACT SKQAB(N)	ABC.....
S	706	87-A90-164-080	SW,TACT SKQAB(N)	ABC.....
S	707	87-A90-164-080	SW,TACT SKQAB(N)	ABC.....
S	704	87-A90-164-080	SW,TACT SKQAB(N)	ABC.....
S	701	87-A90-164-080	SW,TACT SKQAB(N)	ABC.....
S	753	87-A90-164-080	SW,TACT SKQAB(N)	ABC.....
S	751	87-A90-164-080	SW,TACT SKQAB(N)	ABC.....
S	752	87-A90-164-080	SW,TACT SKQAB(N)	ABC.....
S	755	87-A90-164-080	SW,TACT SKQAB(N)	ABC.....
S	754	87-A90-164-080	SW,TACT SKQAB(N)	ABC.....
S	756	87-A90-872-110	SW,JOG RJS-Y0001-02	ABC.....
C	457	87-010-154-080	CAP CHIP 10P	ABC.....
C	451	87-010-182-080	C-CAP,S 2200P-50 B	ABC.....
C	458	87-010-196-080	CHIP CAPACITOR,0.1-25	ABC.....
C	452	87-010-196-080	CHIP CAPACITOR,0.1-25	ABC.....
C	454	87-010-196-080	CHIP CAPACITOR,0.1-25	ABC.....
C	459	87-010-196-080	CHIP CAPACITOR,0.1-25	ABC.....
C	455	87-010-196-080	CHIP CAPACITOR,0.1-25	ABC.....
C	456	87-010-316-080	C-CAP,S 33P-50 CH	ABC.....
C	453	87-010-316-080	C-CAP,S 33P-50 CH	ABC.....
C	460	87-010-154-080	CAP CHIP 10P	ABC.....
C	467	87-010-196-080	CHIP CAPACITOR,0.1-25	ABC.....
C	461	87-010-196-080	CHIP CAPACITOR,0.1-25	ABC.....
C	468	87-010-196-080	CHIP CAPACITOR,0.1-25	ABC.....
C	466	87-010-197-080	CAP, CHIP 0.01 DM	ABC.....
C	465	87-010-198-080	CAP, CHIP 0.022	ABC.....
C	464	87-010-198-080	CAP, CHIP 0.022	ABC.....
C	469	87-010-311-080	CAP 12P	ABC.....
C	463	87-010-805-080	CAP, S 1-16	ABC.....
C	462	87-015-677-080	CAP,E 100-6.3 7L	ABC.....
C	474	87-010-196-080	CHIP CAPACITOR,0.1-25	ABC.....
C	475	87-010-196-080	CHIP CAPACITOR,0.1-25	ABC.....
C	478	87-010-197-080	CAP, CHIP 0.01 DM	ABC.....
C	477	87-010-197-080	CAP, CHIP 0.01 DM	ABC.....
C	476	87-010-197-080	CAP, CHIP 0.01 DM	ABC.....
C	472	87-010-198-080	CAP, CHIP 0.022	ABC.....
C	470	87-010-312-080	C-CAP,S 15P-50 CH	ABC.....
C	473	87-010-317-080	C-CAP,S 39P-50 CH	ABC.....
C	479	87-018-134-080	CAPACITOR,TC-U 0.01-16	ABC.....
CN	452	87-099-569-010	CONN,12P TUC-P12P-B1	ABC.....
CN	454	87-A60-134-010	CONN,9P V FE	ABC.....
CN	451	87-A60-390-010	CONN,3P H BGE TKX-P03P-A1	ABC.....
CN	453	87-A60-607-010	CONN,7P H BLK 5085 RECE	ABC.....
D	452	87-A40-470-080	DIODE,1SS254	ABC.....
D	451	87-A40-470-080	DIODE,1SS254	ABC.....
IC	451	87-A20-177-010	IC,BA7184S	ABC.....
L	451	87-005-440-080	COIL,47UH FLR50	ABC.....
L	452	87-005-687-080	COIL 18UH	ABC.....
L	453	87-005-692-080	COIL,47UH	ABC.....
Q	452	87-026-210-080	CHIP-TR,DTC144EK	ABC.....
Q	459	87-026-210-080	CHIP-TR,DTC144EK	ABC.....
Q	451	87-026-210-080	CHIP-TR,DTC144EK	ABC.....
Q	458	87-026-211-080	TR,DTA144EK	ABC.....
Q	457	89-324-122-080	TR,2SC2412K	ABC.....
Q	454	89-324-122-080	TR,2SC2412K	ABC.....
Q	453	89-324-122-080	TR,2SC2412K	ABC.....
Q	456	89-324-122-080	TR,2SC2412K	ABC.....
C	901	87-010-178-080	CHIP CAP 1000P	A.....
C	907	87-010-178-080	CHIP CAP 1000P	A.C.....
C	903	87-010-196-080	CHIP CAPACITOR,0.1-25	A.C.....
C	908	87-010-196-080	CHIP CAPACITOR,0.1-25	A.C.....
C	905	87-010-196-080	CHIP CAPACITOR,0.1-25	A.C.....
C	906	87-010-374-080	CAP, ELECT 47-10V	A.C.....
C	909	87-010-374-080	CAP, ELECT 47-10V	A.C.....
C	904	87-010-374-080	CAP, ELECT 47-10V	A.C.....
C	900	87-010-615-080	CAP,E 2.2-50 BP	A.C.....
C	918	87-010-154-080	CAP CHIP 10P	A.C.....
C	911	87-010-178-080	CHIP CAP 1000P	A.C.....
C	912	87-010-194-080	CAP, CHIP 0.047	A.C.....
C	917	87-010-196-080	CHIP CAPACITOR,0.1-25	A.C.....
C	914	87-010-196-080	CHIP CAPACITOR,0.1-25	A.C.....
C	915	87-010-374-080	CAP, ELECT 47-10V	A.C.....
C	910	87-010-374-080	CAP, ELECT 47-10V	A.C.....
C	916	87-010-405-080	CAP, ELECT 10-50V	A.C.....
C	913	87-010-405-080	CAP, ELECT 10-50V	A.C.....
C	919	87-012-158-080	C-CAP,S 390P-50 CH	A.C.....

C	923	87-010-196-080	CHIP CAPACITOR,0.1-25	A.C.....
C	926	87-010-196-080	CHIP CAPACITOR,0.1-25	A.C.....
C	924	87-010-196-080	CHIP CAPACITOR,0.1-25	A.C.....
C	928	87-010-197-080	CAP, CHIP 0.01 DM	A.C.....
C	927	87-010-374-080	CAP, ELECT 47-10V	A.C.....
C	925	87-010-401-080	CAP, ELECT 1-50V	A.C.....
C	922	87-010-405-080	CAP, ELECT 10-50V	A.C.....
C	920	87-010-405-080	CAP, ELECT 10-50V	A.C.....
C	921	87-012-156-080	C-CAP,S 220P-50 CH	A.C.....
C	939	87-010-178-080	CHIP CAP 1000P	A.C.....
C	935	87-010-196-080	CHIP CAPACITOR,0.1-25	A.C.....
C	932	87-010-322-080	C-CAP,S 100P-50 CH	A.C.....
C	931	87-010-322-080	C-CAP,S 100P-50 CH	A.C.....
C	937	87-010-545-080	CAP, ELECT 0.22-50V	A.....
C	938	87-010-545-080	CAP, ELECT 0.22-50V	A.....
C	936	87-016-087-080	C-CAP,S 0.47-16F	A.C.....
C	940	87-010-176-080	C-CAP,S 680P-50 SL	A.C.....
C	949	87-010-196-080	CHIP CAPACITOR,0.1-25	.BC.....
C	943	87-010-196-080	CHIP CAPACITOR,0.1-25	.BC.....
C	942	87-010-197-080	CAP, CHIP 0.01 DM	.BC.....
C	948	87-010-197-080	CAP, CHIP 0.01 DM	.BC.....
C	941	87-010-316-080	C-CAP,S 33P-50 CH	.BC.....
C	946	87-010-317-080	C-CAP,S 39P-50 CH	.BC.....
C	945	87-010-317-080	C-CAP,S 39P-50 CH	.BC.....
C	944	87-010-374-080	CAP, ELECT 47-10V	.BC.....
C	947	87-010-405-080	CAP, ELECT 10-50V	.BC.....
C	957	87-010-197-080	CAP, CHIP 0.01 DM	.BC.....
C	958	87-010-197-080	CAP, CHIP 0.01 DM	.BC.....
C	952	87-010-263-080	CAP, ELECT 100-10V	.BC.....
C	951	87-010-318-080	C-CAP,S 47P-50 CH	.BC.....
C	959	87-010-374-080	CAP, ELECT 47-10V	.BC.....
C	955	87-010-402-080	CAP, ELECT 2.2-50V	.BC.....
C	956	87-010-402-080	CAP, ELECT 2.2-50V	.BC.....
C	953	87-010-405-080	CAP, ELECT 10-50V	.BC.....
C	954	87-010-405-080	CAP, ELECT 10-50V	.BC.....
C	960	87-010-196-080	CHIP CAPACITOR,0.1-25	.BC.....
C	964	87-010-196-080	CHIP CAPACITOR,0.1-25	.BC.....
C	961	87-010-197-080	CAP, CHIP 0.01 DM	.BC.....
C	962	87-010-320-080	CHIP CAP 68P	.BC.....
C	963	87-010-321-080	CHIP CAPACITOR,82P(J)	.BC.....
C	965	87-010-405-080	CAP, ELECT 10-50V	.BC.....
C	975	87-010-178-080	CHIP CAP 1000P	ABC.....
C	971	87-010-182-080	C-CAP,S 2200P-50 B	ABC.....
C	970	87-010-193-080	CHIP CAPACITOR,0.033	ABC.....
C	974	87-010-263-080	CAP, ELECT 100-10V	ABC.....
C	972	87-010-805-080	CAP, S 1-16	ABC.....
C	973	87-012-154-080	C-CAP,S 150P-50 CH	ABC.....
C	979	87-A10-468-080	CAP,E 10-10 M 7L BP SRA	ABC.....
C	980	87-010-178-080	CHIP CAP 1000P	A.C.....
C	981	87-010-178-080	CHIP CAP 1000P	.BC.....
CF	940	87-A90-184-080	FLTR,SFE5.74MC2	.BC.....
CF	941	87-A90-204-080	FLTR,CER CDSH5.74MC39K	.BC.....
CN	901	87-A60-139-010	CONN,14P V FE	ABC.....
D	901	87-A40-381-080	VARI-CAP,MA840-B	A.C.....
D	902	87-A40-470-080	DIODE,1SS254	A.C.....
IC	901	87-A20-267-010	IC,SAA7283ZP	A.C.....
IC	941	87-A20-282-010	IC,TDA9840	.BC.....
IC	940	87-A20-304-010	IC,TA8721ASN	.BC.....
IC	970	87-A20-562-010	IC,SDA5650P-DIP-14	ABC.....
L	903	87-005-438-080	COIL,33UH FLR50	A.C.....
L	902	87-005-438-080	COIL,33UH FLR50	A.C.....
L	901	87-005-452-080	COIL,470UH FLR50	A.C.....
L	904	87-005-682-080	COIL,6.8UH J LF5.0S	A.C.....
L	943	87-005-440-080	COIL,47UH FLR50	.BC.....
L	941	87-005-440-080	COIL,47UH FLR50	.BC.....
L	940	87-005-684-080	COIL,10UH	.BC.....
L	942	87-A50-097-010	COIL,126ANS-A3561HM	.BC.....
L	970	87-005-432-080	COIL,10UH	ABC.....
Q	940	89-324-122-080	TR,2SC2412K	.BC.....
Q	970	89-110-372-080	TR,2SA1037(140MHZ 200MW)	ABC.....
SFR	940	87-024-524-080	SFR,22K DIA 6V NTP	.BC.....
X	901	87-A70-029-080	VIB,XTAL 8.192MHZ	A.C.....
X	940	87-A70-041-080	VIB,XTAL 10MHZ	.BC.....
C	606	87-010-178-080	CHIP CAP 1000P	ABC.....
C	605	87-010-197-080	CAP, CHIP 0.01 DM	ABC.....
C	600	87-010-197-080	CAP, CHIP 0.01 DM	ABC.....
C	601	87-010-197-080	CAP, CHIP 0.01 DM	ABC.....
C	603	87-012-154-080	C-CAP,S 150P-50 CH	ABC.....
C	602	87-012-154-080	C-CAP,S 150P-50 CH	ABC.....
C	650	87-010-197-080	CAP, CHIP 0.01 DM	ABC.....
C	658	87-010-197-080	CAP, CHIP 0.01 DM	ABC.....
C	659	87-010-318-080	C-CAP,S 47P-50 CH	ABC.....
C	655	87-010-322-080	C-CAP,S 100P-50 CH	ABC.....
C	657	87-010-322-080	C-CAP,S 100P-50 CH	ABC.....
C	656	87-010-322-080	C-CAP,S 100P-50 CH	ABC.....
C	653	87-012-154-080	C-CAP,S 150P-50 CH	ABC.....
C	652	87-012-154-080	C-CAP,S 150P-50 CH	ABC.....
C	651	87-012-154-080	C-CAP,S 150P-50 CH	ABC.....
C	654	87-012-154-080	C-CAP,S 150P-50 CH	ABC.....
C	669	87-010-318-080	C-CAP,S 47P-50 CH	ABC.....
C	662	87-010-322-080	C-CAP,S 100P-50 CH	ABC.....
C	665	87-010-322-080	C-CAP,S 100P-50 CH	ABC.....

C	667	87-010-322-080	C-CAP,S 100P-50 CH	ABC.....
C	663	87-010-322-080	C-CAP,S 100P-50 CH	ABC.....
C	664	87-010-322-080	C-CAP,S 100P-50 CH	ABC.....
C	668	87-010-322-080	C-CAP,S 100P-50 CH	ABC.....
C	661	87-012-154-080	C-CAP,S 150P-50 CH	ABC.....
C	660	87-012-154-080	C-CAP,S 150P-50 CH	ABC.....
C	674	87-010-805-080	CAP, S 1-16	ABC.....
C	673	87-012-154-080	C-CAP,S 150P-50 CH	ABC.....
C	670	87-012-154-080	C-CAP,S 150P-50 CH	ABC.....
C	672	87-012-154-080	C-CAP,S 150P-50 CH	ABC.....
C	671	87-012-154-080	C-CAP,S 150P-50 CH	ABC.....
C	678	87-016-461-080	C-CAP,S 0.47-16F	ABC.....
C	679	87-016-461-080	C-CAP,S 0.47-16F	ABC.....
C	675	87-A10-205-080	CAP,E 470-6.3 SRG	ABC.....
C	677	87-A10-205-080	CAP,E 470-6.3 SRG	ABC.....
C	687	87-010-197-080	CAP, CHIP 0.01 DM	ABC.....
C	684	87-010-805-080	CAP, S 1-16	ABC.....
C	681	87-010-805-080	CAP, S 1-16	ABC.....
C	685	87-015-677-080	CAP,E 100-6.3 7L	ABC.....
C	688	87-015-682-080	CAP,E 22-16 7L	ABC.....
C	682	87-015-684-080	CAP,E 47-16 7L	ABC.....
C	686	87-015-695-080	CAP,E 1-50 7L	ABC.....
C	689	87-015-695-080	CAP,E 1-50 7L	ABC.....
C	680	87-016-461-080	C-CAP,S 0.47-16F	ABC.....
C	683	87-016-461-080	C-CAP,S 0.47-16F	ABC.....
C	692	87-010-060-080	ELECTROLYTIC 100-16V	ABC.....
C	691	87-010-196-080	CHIP CAPACITOR,0.1-25	ABC.....
C	699	87-010-197-080	CAP, CHIP 0.01 DM	ABC.....
C	693	87-015-676-080	ELECTROLYTIC CAPACITOR, 47U-6.	ABC.....
C	690	87-015-676-080	ELECTROLYTIC CAPACITOR, 47U-6.	ABC.....
C	698	87-016-461-080	C-CAP,S 0.47-16F	ABC.....
C	697	87-016-461-080	C-CAP,S 0.47-16F	ABC.....
C	695	87-016-461-080	C-CAP,S 0.47-16F	ABC.....
C	696	87-016-461-080	C-CAP,S 0.47-16F	ABC.....
CN	651	87-A60-417-010	CONN,21P V BLK 0350535000	ABC.....
CN	652	87-A60-417-010	CONN,21P V BLK 0350535000	ABC.....
CN	653	87-A60-650-010	CONN,16P H GRY TUC-P16X-C1	ABC.....
D	654	87-017-130-080	ZENER,HZS12A1	ABC.....
D	652	87-027-406-080	ZENER,HZ3A3 (200MA)	.BC.....
D	651	87-A40-470-080	DIODE,1SS254	.BC.....
D	653	87-A40-470-080	DIODE,1SS254	ABC.....
FB	651	87-003-223-080	FERRITE BEAD BL02RN2	ABC.....
IC	651	87-A20-943-080	C-IC,LA7157M	ABC.....
J	651	87-A60-368-010	JACK,PIN 2P JK020123	ABC.....
L	651	87-005-440-080	COIL,47UH FLR50	ABC.....
L	652	87-005-440-080	COIL,47UH FLR50	ABC.....
Q	656	87-026-210-080	CHIP-TR,DTC144EK	.BC.....
Q	654	87-026-210-080	CHIP-TR,DTC144EK	ABC.....
Q	652	87-026-210-080	CHIP-TR,DTC144EK	.BC.....
Q	653	87-026-211-080	TR,DTA144EK	ABC.....
Q	655	89-110-372-080	TR,2SA1037(140MHZ 200MW)	.BC.....
Q	651	89-110-372-080	TR,2SA1037(140MHZ 200MW)	.BC.....
C	508	87-010-060-080	ELECTROLYTIC 100-16V	ABC.....
C	501	87-010-188-080	CAP,CHIP 6800P	ABC.....
C	505	87-010-196-080	CHIP CAPACITOR,0.1-25	ABC.....
C	502	87-010-320-080	CHIP CAP 68P	ABC.....
C	506	87-010-321-080	CHIP CAPACITOR,82P(J)	ABC.....
C	504	87-015-681-080	CAP,E 10-16 7L	ABC.....
C	503	87-015-682-080	CAP,E 22-16 7L	ABC.....
C	509	87-015-684-080	CAP,E 47-16 7L	ABC.....
C	507	87-015-688-080	CAP,E 4.7-35 7L	ABC.....
C	511	87-010-188-080	CAP,CHIP 6800P	ABC.....
C	515	87-010-196-080	CHIP CAPACITOR,0.1-25	ABC.....
C	510	87-010-196-080	CHIP CAPACITOR,0.1-25	ABC.....
C	512	87-010-320-080	CHIP CAP 68P	ABC.....
C	514	87-010-321-080	CHIP CAPACITOR,82P(J)	ABC.....
C	513	87-015-681-080	CAP,E 10-16 7L	ABC.....
C	517	87-015-681-080	CAP,E 10-16 7L	ABC.....
C	516	87-015-688-080	CAP,E 4.7-35 7L	ABC.....
C	519	87-015-688-080	CAP,E 4.7-35 7L	ABC.....
C	522	87-010-196-080	CHIP CAPACITOR,0.1-25	ABC.....
C	526	87-015-681-080	CAP,E 10-16 7L	ABC.....
C	523	87-015-681-080	CAP,E 10-16 7L	ABC.....
C	524	87-015-682-080	CAP,E 22-16 7L	ABC.....
C	521	87-015-684-080	CAP,E 47-16 7L	ABC.....
C	531	87-010-196-080	CHIP CAPACITOR,0.1-25	ABC.....
C	530	87-015-684-080	CAP,E 47-16 7L	ABC.....
C	535	87-015-688-080	CAP,E 4.7-35 7L	ABC.....
C	539	87-015-688-080	CAP,E 4.7-35 7L	ABC.....
C	532	87-015-688-080	CAP,E 4.7-35 7L	ABC.....
C	534	87-015-688-080	CAP,E 4.7-35 7L	ABC.....
C	533	87-015-688-080	CAP,E 4.7-35 7L	ABC.....
C	548	87-015-681-080	CAP,E 10-16 7L	ABC.....
C	542	87-015-684-080	CAP,E 47-16 7L	ABC.....
C	545	87-015-688-080	CAP,E 4.7-35 7L	ABC.....
C	547	87-015-695-080	CAP,E 1-50 7L	ABC.....
C	546	87-015-695-080	CAP,E 1-50 7L	ABC.....
CN	501	87-A60-649-010	CONN,9P H GRY TUC-P09X-C1	ABC.....
D	501	87-A40-470-080	DIODE,1SS254	ABC.....
IC	503	87-A20-056-010	IC,BA3880S	ABC.....
IC	502	87-A20-515-010	IC,AN5285K	ABC.....
IC	501	87-A20-522-010	IC,MM1124AD	ABC.....

ELECTRICAL MAIN PARTS LIST - 10/10

L	501	87-005-432-080	COIL,10UH	ABC.....
Q	504	87-026-210-080	CHIP-TR,DTC144EK	ABC.....
Q	502	87-026-210-080	CHIP-TR,DTC144EK	ABC.....
Q	503	87-026-227-080	CHIP-TR,DTA114EK	ABC.....
Q	501	87-026-227-080	CHIP-TR,DTA114EK	ABC.....
Q	505	89-324-122-080	TR,2SC2412K	ABC.....
Q	507	89-324-122-080	TR,2SC2412K	ABC.....
Q	506	89-324-122-080	TR,2SC2412K	ABC.....

ACCESSORIES/PACKAGE LIST - 1

NOTE: The characters in the suffix column indicate the part usage.

```
6500K ..................XX....................................A...................
6500Z ..................XX....................................B...................
6500EH .................XX....................................C..................
                        KANRI
REF.NO     PARTS NO.    NO.     DESCRIPTION                  SUFFIX

         88-JU1-901-010    IB,FX6500K (E) -M                 A...................
         88-JU1-905-010    IB,FX6500Z (EGI) -M               .B..................
         88-JU1-907-010    IB,FX6500EH (EGDS) -M             ..C.................
         87-050-076-010    AC CORD SET ASSY,E                .BC.................
         87-A80-032-010    CORD,PIN 2P RED-WHT               ABC.................
         87-A80-062-010    AC CORD SET ASSY,K BLK            A...................
         87-B30-106-010    CORD,RF PAL/UJ0502                ABC.................
         88-JU1-008-010    COVER, JACK                       ABC.................
         88-JU1-670-010    RC UNIT,RC-8VR02                  A...................
         88-JU1-671-010    RC UNIT,RC-8VR03                  .BC.................
```

MECHANICAL PARTS LIST - 1

NOTE: The characters in the suffix column indicate the part usage.

```
6500K ..................XX.....................................A...................
6500Z ..................XX.....................................B...................
6500EH .................XX.....................................C...................
                        KANRI
REF.NO     PARTS NO.    NO.     DESCRIPTION                    SUFFIX

         82-NE6-067-010    BADGE,AIWA 30N                      ABC.................
         84-JP9-021-110    PLATE,FOOT HAIR                     ABC.................
         84-JP9-202-010    SPR-T,DOOR                          ABC.................
         88-JU1-001-010    CABI,FR                             A...................
         88-JU1-002-010    KEY,POWER                           ABC.................
         88-JU1-003-010    KEY,PLAY                            ABC.................
         88-JU1-006-010    DOOR,CASS                           A...................
         88-JU1-007-010    PLATE,THTR                          ABC.................
         88-JU1-010-010    WINDOW,DSPLY                        A...................
         88-JU1-014-010    BTN,PB                              ABC.................
         88-JU1-015-010    BTN,THTR                            ABC.................
         88-JU1-021-010    CABI,FR Z                           .BC.................
         88-JU1-022-010    DOOR,CASS Z                         .B..................
         88-JU1-023-010    WINDOW,DSPLY Z                      .B..................
         88-JU1-025-010    DOOR,CASS EH                        ..C.................
         88-JU1-026-010    WINDOW,DSPLY EH                     ..C.................
         88-JU1-028-010    WINDOW,C3 A                         ABC.................
         81-JUK-045-010    FELT,FOOT 8-8                       ABC.................
         86-JUD-201-210    HLDR,STAY                           ABC.................
         87-JU1-016-010    PANEL,JACK                          .BC.................
         87-JU1-029-010    PANEL,JACK K                        A...................
         87-JU1-202-110    HLDR,PWB                            ABC.................
         88-JU1-005-010    CABI,STEEL                          ABC.................
         88-JU1-012-010    PANEL,RF                            ABC.................
         88-JU1-205-010    HLDR,PWB A                          ABC.................
         88-JU1-009-010    KNOB,RTRY SHUTTLE                   ABC.................
         88-JU1-011-010    KNOB,RTRY JOG                       ABC.................
         87-067-579-010    TAPPING SCREW, BVT2+3-8             ABC.................
         87-067-660-010    TAPPING SCREW, BVT2+3-8             ABC.................
         87-067-689-010    TAPPING SCREW, BVTT+3-8             ABC.................
         87-067-703-010    TAPPING SCREW, BVT2+3-10            ABC.................
         87-067-761-010    TAPPING SCREW, BVT2+3-10            ABC.................
         87-078-180-010    BVT2+3.5-12(BLK)                    ABC.................
         87-761-096-410    VFT2+3-10 GLD                       ABC.................
         87-B10-089-410    VT2+3-12 W/O GOLD                   ABC.................
         87-067-703-010    TAPPING SCREW, BVT2+3-10            ABC.................
         88-JU1-680-010    FF-CABLE, 9P 1.25 90MM 30V          ABC.................
         88-JU1-682-010    FF-CABLE, 10P 1.25 180MM 30V        ABC.................
         88-JU1-684-010    FF-CABLE, 13P 1.25 90MM 60V         ABC.................
         88-JU1-686-010    FF-CABLE, 14P 1.25 110MM 30V        ABC.................
         88-JU1-688-010    FF-CABLE, 26P 1.25 90MM 60V         ABC.................
```

SCHEMATIC DIAGRAM – 1 (WIRE HARNESS DIAGRAM)

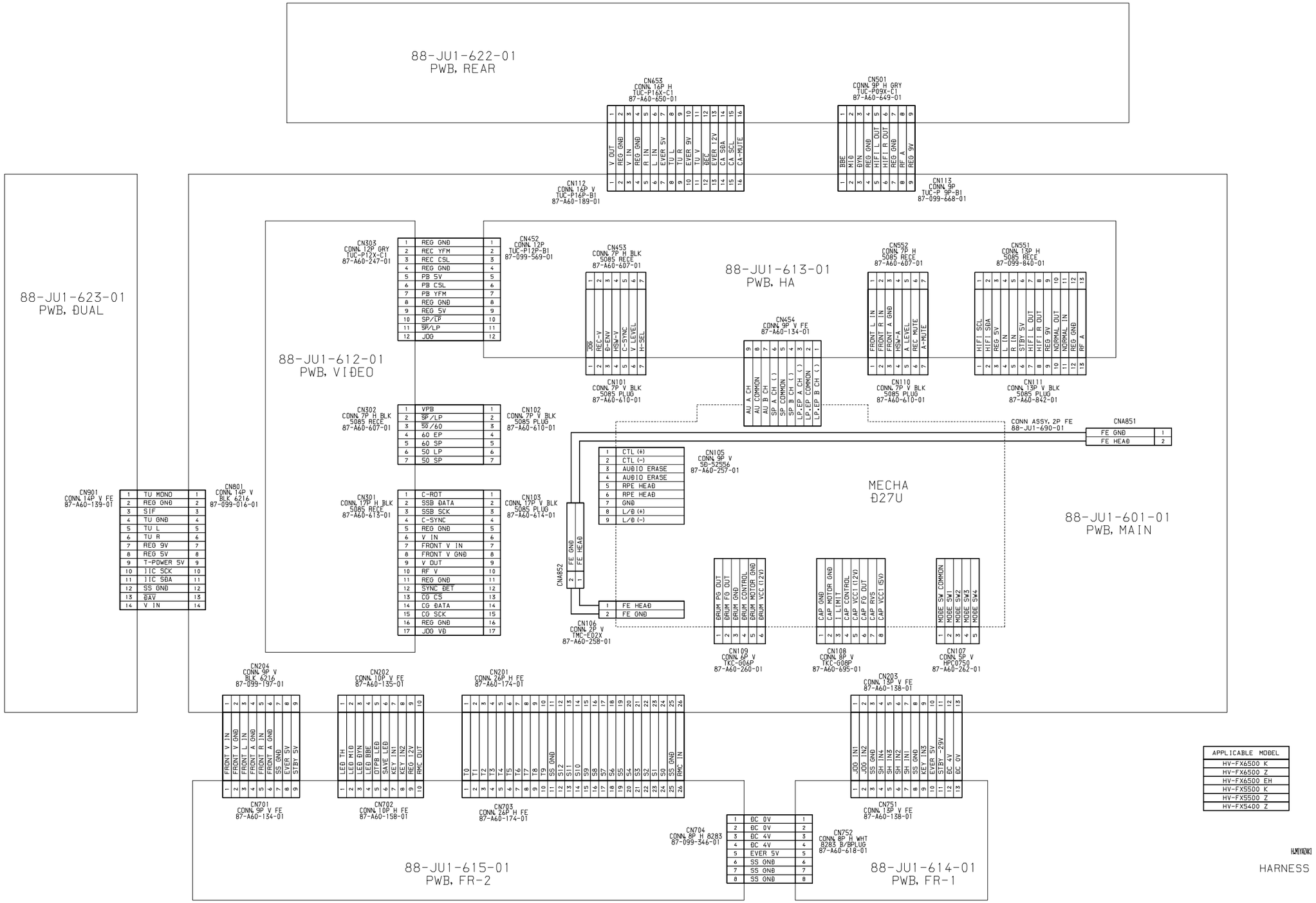

APPLICABLE MODEL
HV-FX6500 K
HV-FX6500 Z
HV-FX6500 EH
HV-FX5500 K
HV-FX5500 Z
HV-FX5400 Z

B-8JU-1HARNESS

8JU-1 HV-FX6500

SCHEMATIC DIAGRAM – 2 (SERVO SECTION)

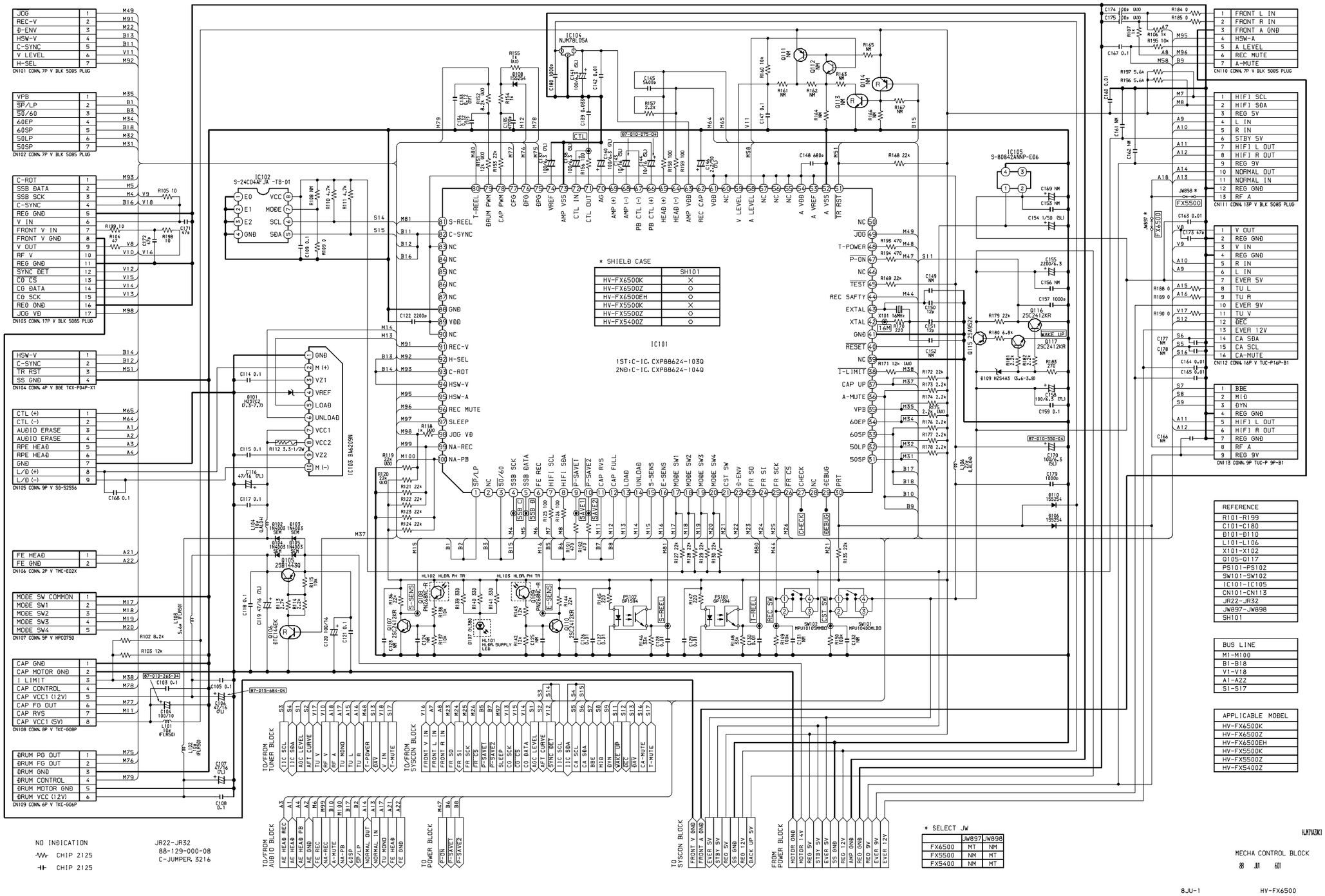

PWB, MAIN (AUDIO BLOCK)

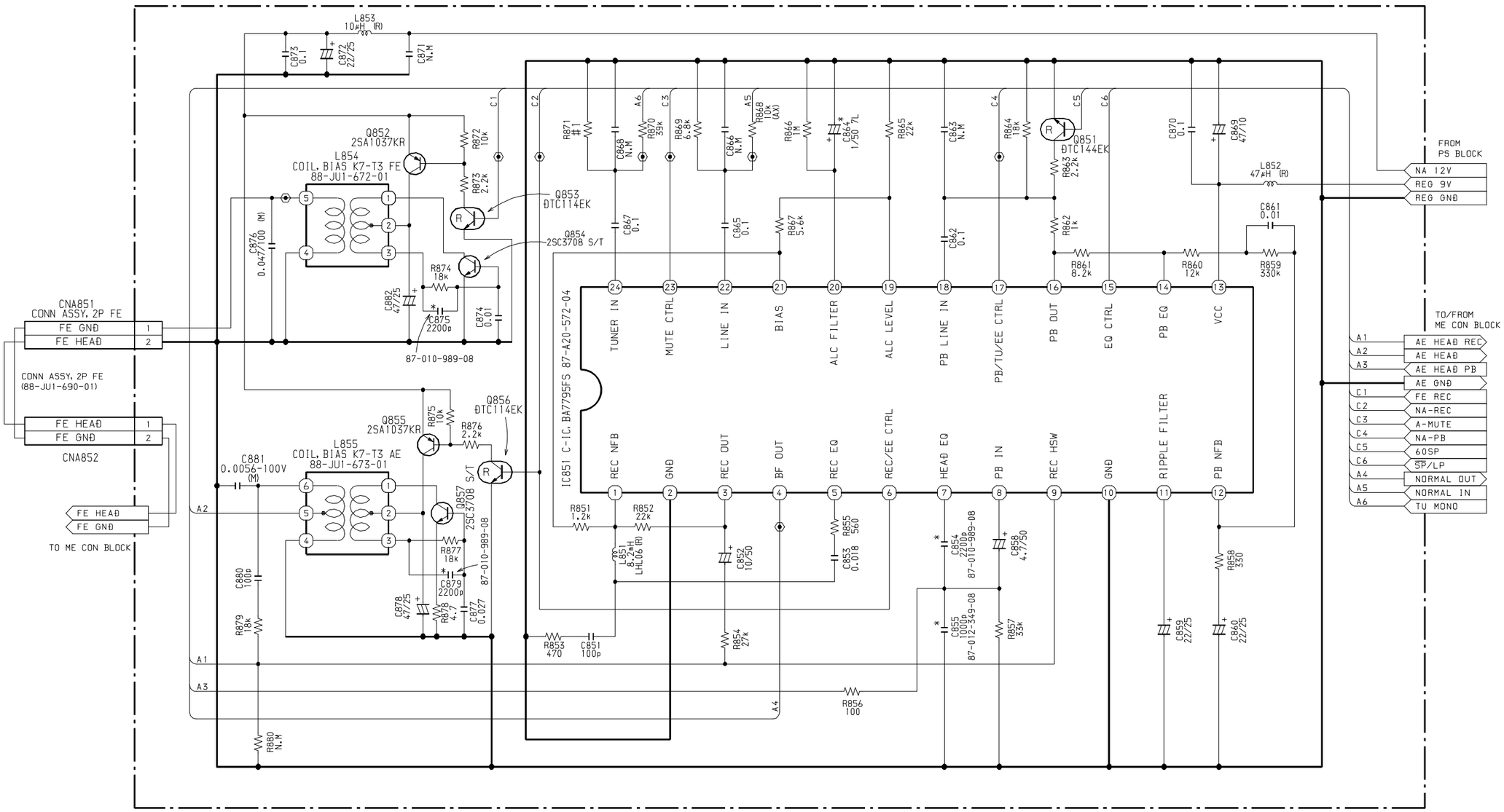

#1 (R871)

	K	Z	EH
HV-FX6500	2.7K	4.7K	4.7K
HV-FX5500	2.7K	4.7K	——
HV-FX5400	——	4.7K	——

REFERENCE
R851 ~ R880
C851 ~ C882
L851 ~ L855
Q851 ~ Q857
IC851
CNA851 ~ CNA852

C-RES. (1/10W)
RES. (1/8W)
CAP. E SME TYPE
CAP. E SME TYPE (2.5mm PICH)
C-CAP.
C-CAP. CH TYPE
CAP. M TYPE
COIL. FLR50 TYPE
CHECK RAND ∅1.5

APPLICABLE MODEL
HV-FX6500K
HV-FX6500Z
HV-FX6500EH
HV-FX5500K
HV-FX5500Z
HV-FX5400Z

中田中田
AUDIO
88 JU1 601

SCHEMATIC DIAGRAM – 4 (POWER SECTION)

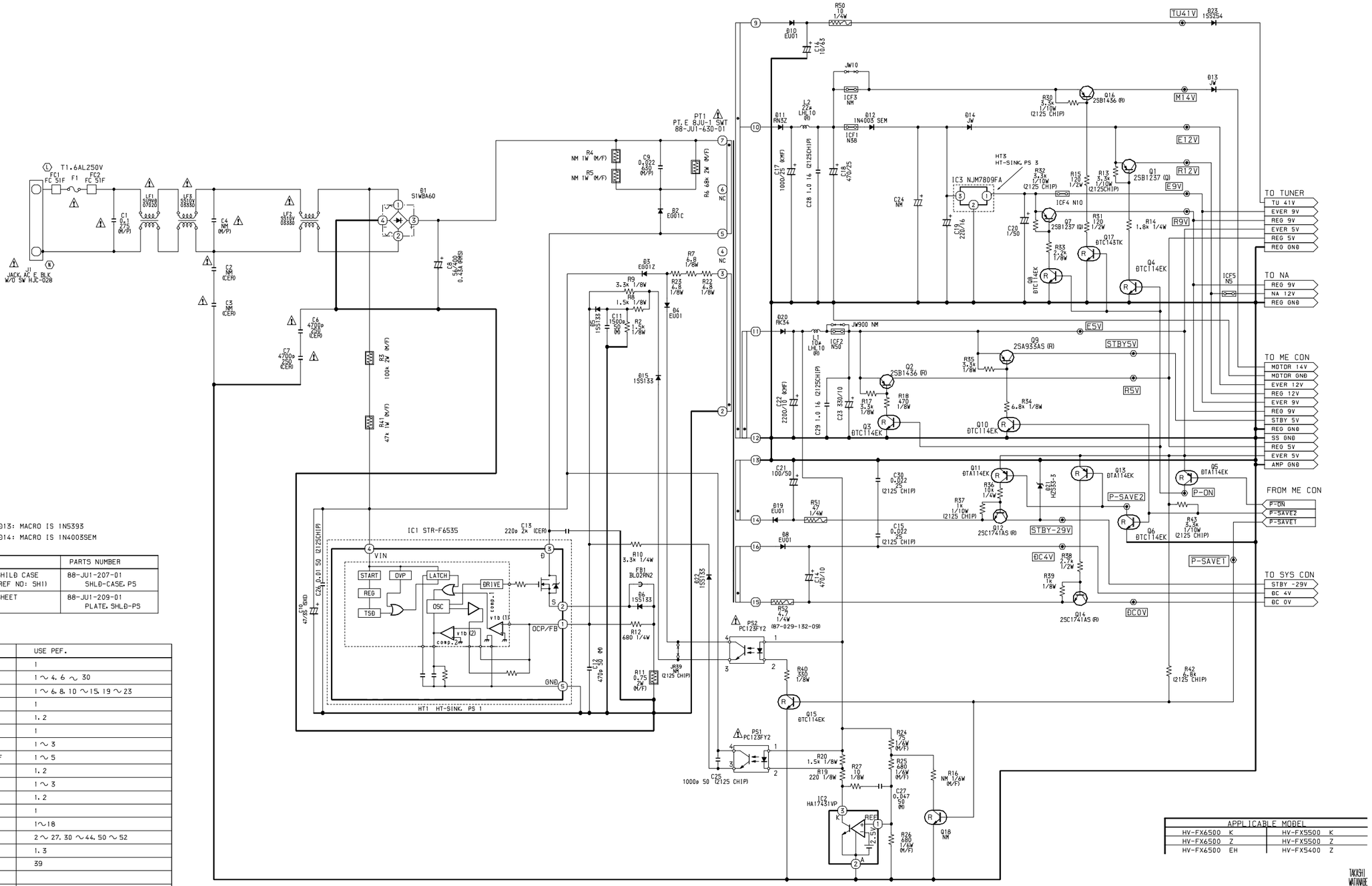

※ D13: MACRO IS IN5393
D14: MACRO IS IN4003SEM

	PARTS NUMBER
SHILD CASE (REF NO: SH1)	88-JU1-207-01 SHLD-CASE.PS
SHEET	88-JU1-209-01 PLATE.SHLD-PS

	USE PEF.
J	1
C	1 ~ 4. 6 ~ 30
D	1 ~ 6. 8. 10 ~ 15. 19 ~ 23
F	1
FC	1. 2
FB	1
IC	1 ~ 3
ICF	1 ~ 5
L	1. 2
LF	1 ~ 3
PS	1. 2
PT	1
Q	1~18
R	2 ~ 27. 30 ~ 44. 50 ~ 52
HT	1. 3
JR	39

APPLICABLE MODEL	
HV-FX6500 K	HV-FX5500 K
HV-FX6500 Z	HV-FX5500 Z
HV-FX6500 EH	HV-FX5400 Z

TAKASHI WATANABE

PS

88 JU1 601 01

QC

8JU-1 HV-FX6500

SCHEMATIC DIAGRAM – 5 (SYSCON SECTION)

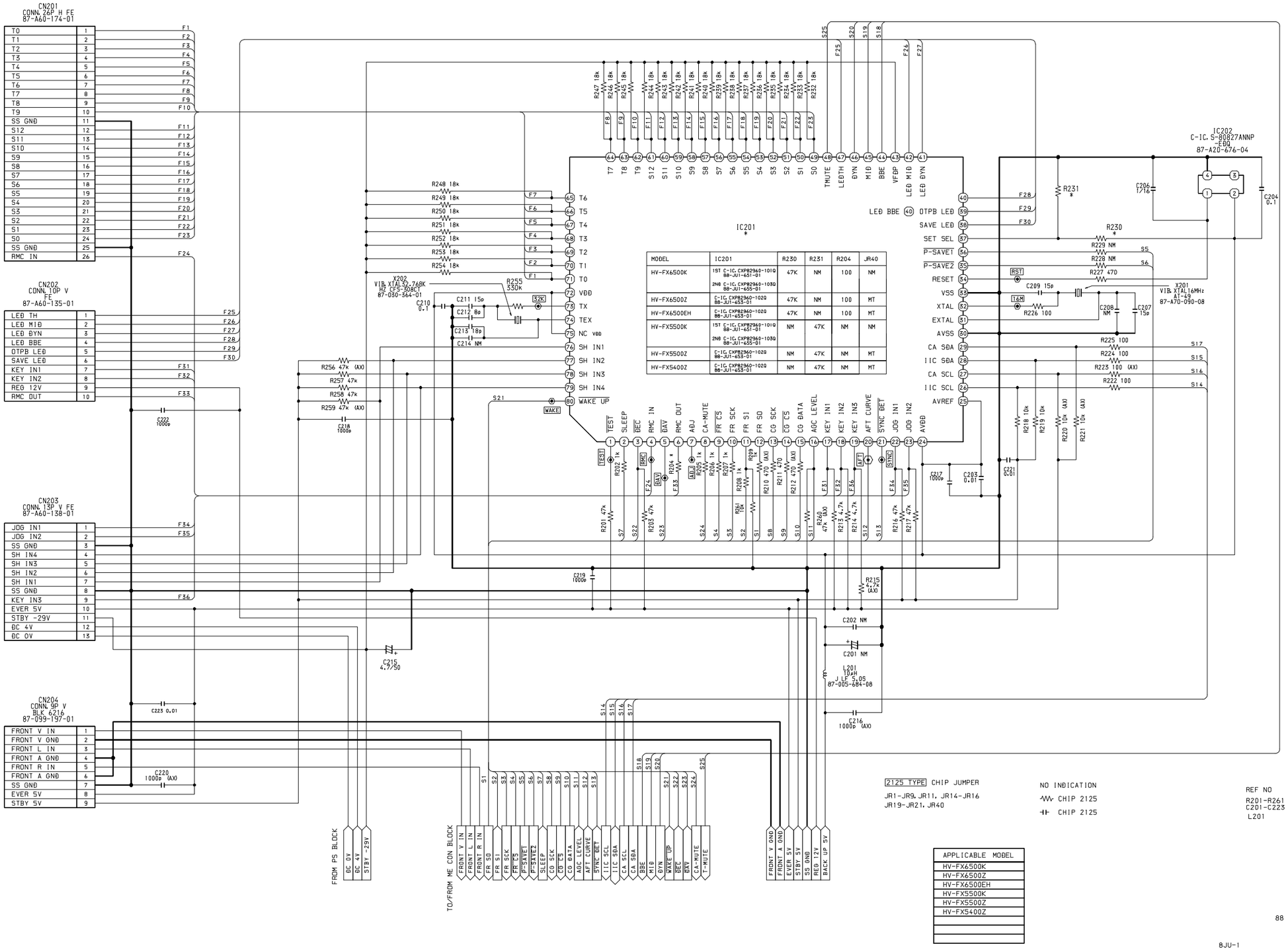

MODEL	IC201	R230	R231	R204	JR40
HV-FX6500K	1ST C-IC. CXP82960-101Q 88-JU1-651-01 2ND C-IC. CXP82960-103Q 88-JU1-655-01	47K	NM	100	NM
HV-FX6500Z	C-IC. CXP82960-102Q 88-JU1-653-01	47K	NM	100	MT
HV-FX6500EH	C-IC. CXP82960-102Q 88-JU1-653-01	47K	NM	100	MT
HV-FX5500K	1ST C-IC. CXP82960-101Q 88-JU1-651-01 2ND C-IC. CXP82960-103Q 88-JU1-655-01	NM	47K	NM	NM
HV-FX5500Z	C-IC. CXP82960-102Q 88-JU1-653-01	NM	47K	NM	MT
HV-FX5400Z	C-IC. CXP82960-102Q 88-JU1-653-01	NM	47K	NM	MT

APPLICABLE MODEL
HV-FX6500K
HV-FX6500Z
HV-FX6500EH
HV-FX5500K
HV-FX5500Z
HV-FX5400Z

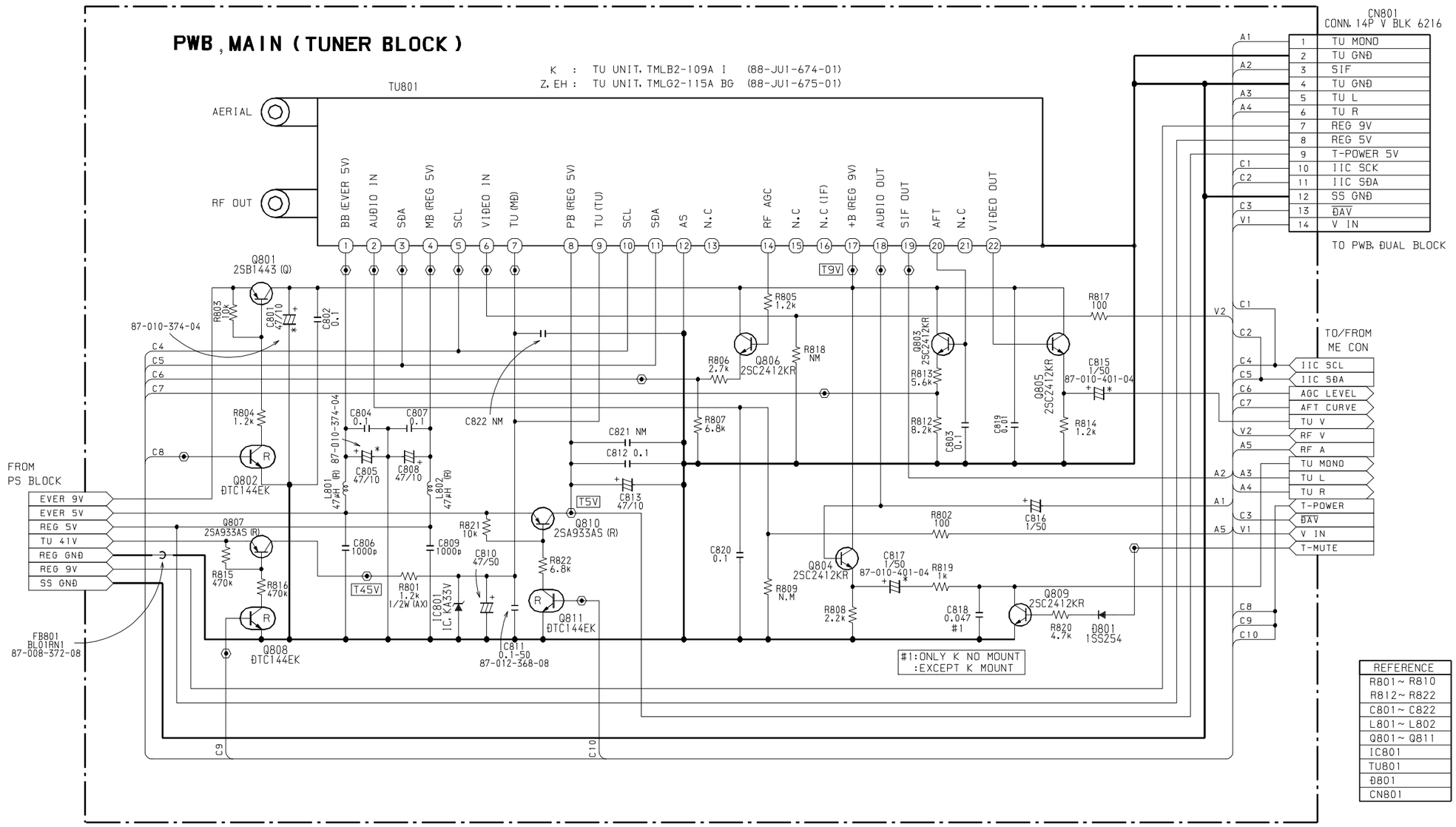

REFERENCE
R801~ R810
R812~ R822
C801~ C822
L801~ L802
Q801~ Q811
IC801
TU801
D801
CN801

C-RES, (1/10W)
RES, (1/8W)
CAP, E SME TYPE
CAP, E SME TYPE (2.5mm PICH)
C-CAP,
C-TR, 2SC2412KR
C-TR, DTC144EK
COIL, FLR50 TYPE
CHECK RAND ∅1.5

APPLICABLE MODEL
HV-FX6500K
HV-FX6500Z
HV-FX6500EH
HV-FX5500K
HV-FX5500Z
HV-FX5400Z

中田中田
TUNER
88 JU1 601

SCHEMATIC DIAGRAM – 7 (FRONT SECTION)

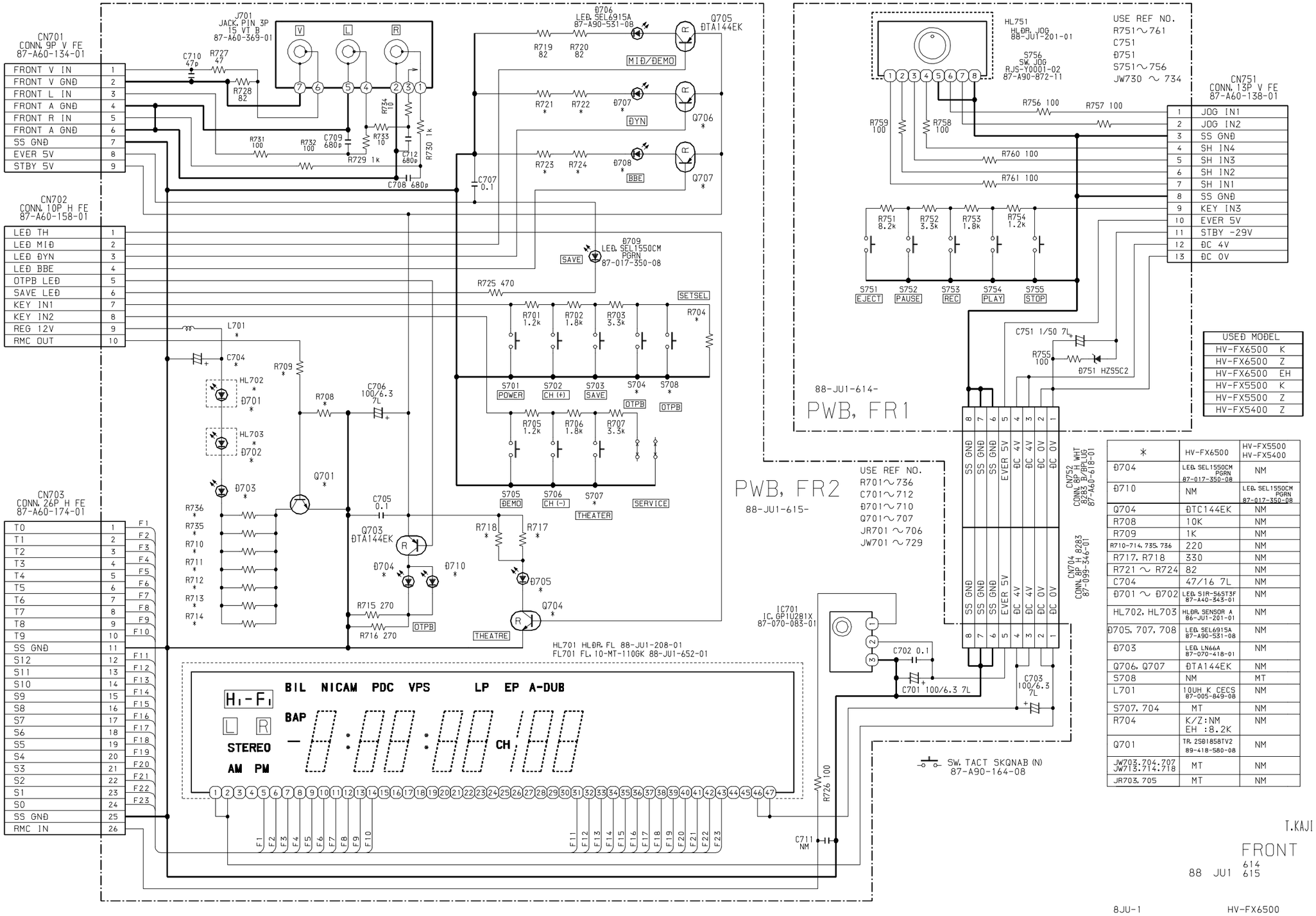

USED MODEL	
HV-FX6500	K
HV-FX6500	Z
HV-FX6500	EH
HV-FX5500	K
HV-FX5500	Z
HV-FX5400	Z

*	HV-FX6500	HV-FX5500 HV-FX5400
D704	LED. SEL1550CM PGRN 87-017-350-08	NM
D710	NM	LED. SEL1550CM PGRN 87-017-350-08
Q704	DTC144EK	NM
R708	10K	NM
R709	1K	NM
R710-714, 735, 736	220	NM
R717, R718	330	NM
R721 ~ R724	82	NM
C704	47/16 7L	NM
D701 ~ D702	LED. SIR-56ST3F 87-A40-343-01	NM
HL702, HL703	HLDR. SENSOR A 86-JU1-201-01	NM
D705, 707, 708	LED. SEL6915A 87-A90-531-08	NM
D703	LED. LN66A 87-070-418-01	NM
Q706, Q707	DTA144EK	NM
S708	NM	MT
L701	10UH K CECS 87-005-849-08	NM
S707, 704	MT	NM
R704	K/Z:NM EH :8.2K	NM
Q701	TR. 2SD1858TV2 89-418-580-08	NM
JW703,704,707 JW713,714,718	MT	NM
JR703, 705	MT	NM

T.KAJI

FRONT

88 JU1 614 615

8JU-1 HV-FX6500

SCHEMATIC DIAGRAM – 8 (HEAD AMP SECTION)

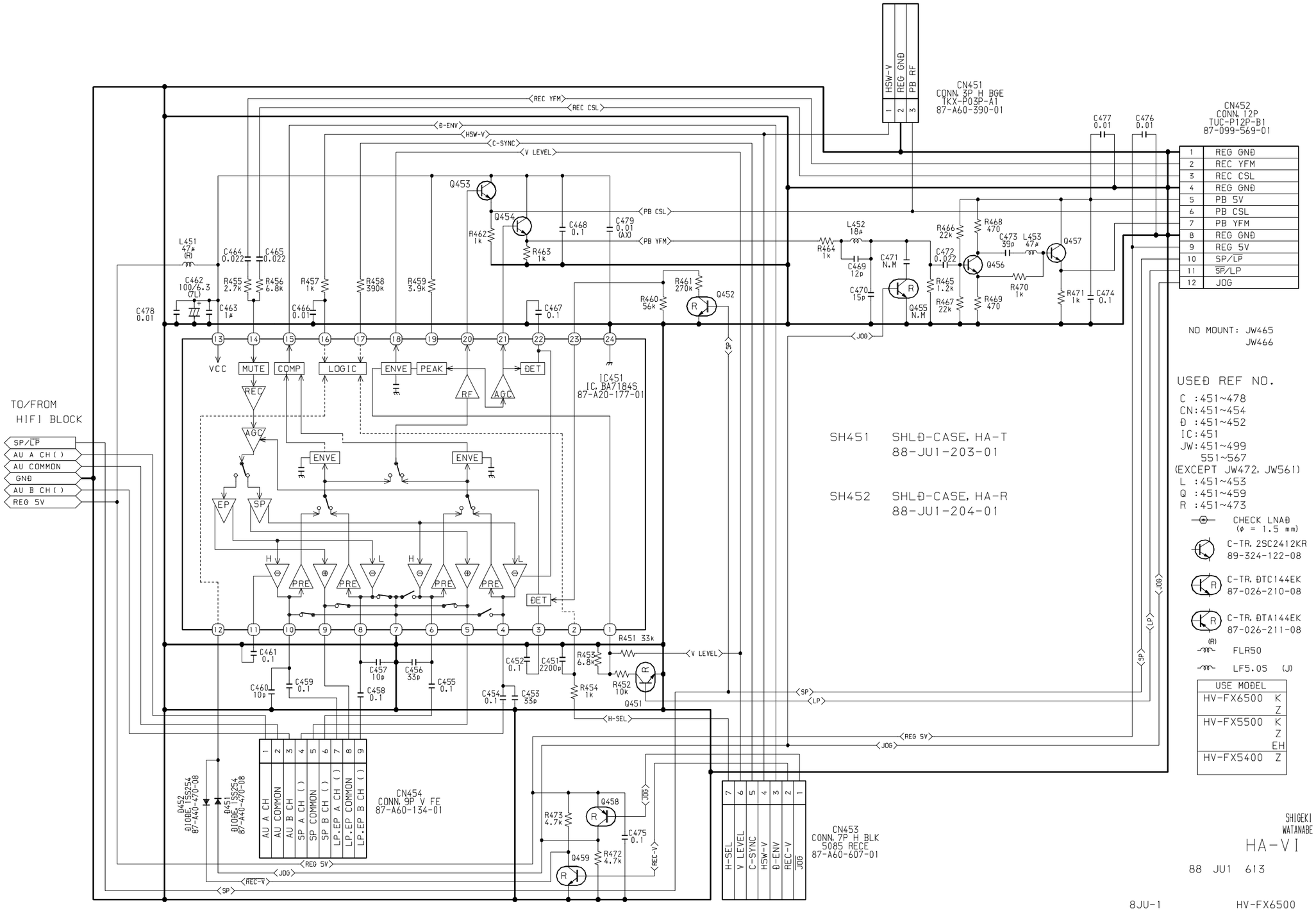

8JU-1/2/3, HA-VI

SCHEMATIC DIAGRAM – 9 (HI-FI SECTION)

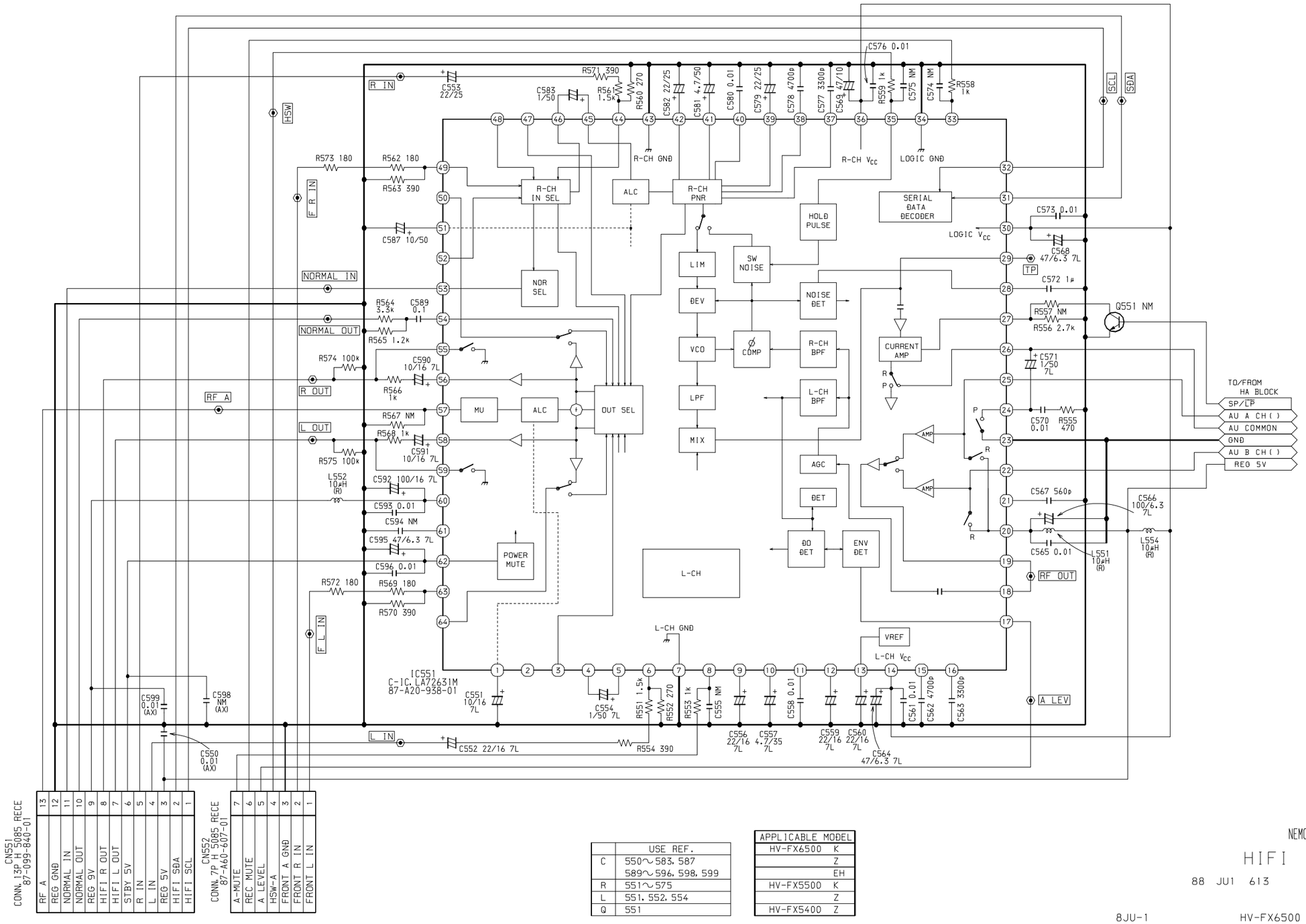

B-8JU-1HIFI

	USE REF.
C	550～583, 587 589～596, 598, 599
R	551～575
L	551, 552, 554
Q	551

APPLICABLE MODEL	
HV-FX6500	K
	Z
	EH
HV-FX5500	K
	Z
HV-FX5400	Z

NEMOTO

HIFI

88 JU1 613

8JU-1 HV-FX6500

SCHEMATIC DIAGRAM – 10 (VIDEO SECTION)

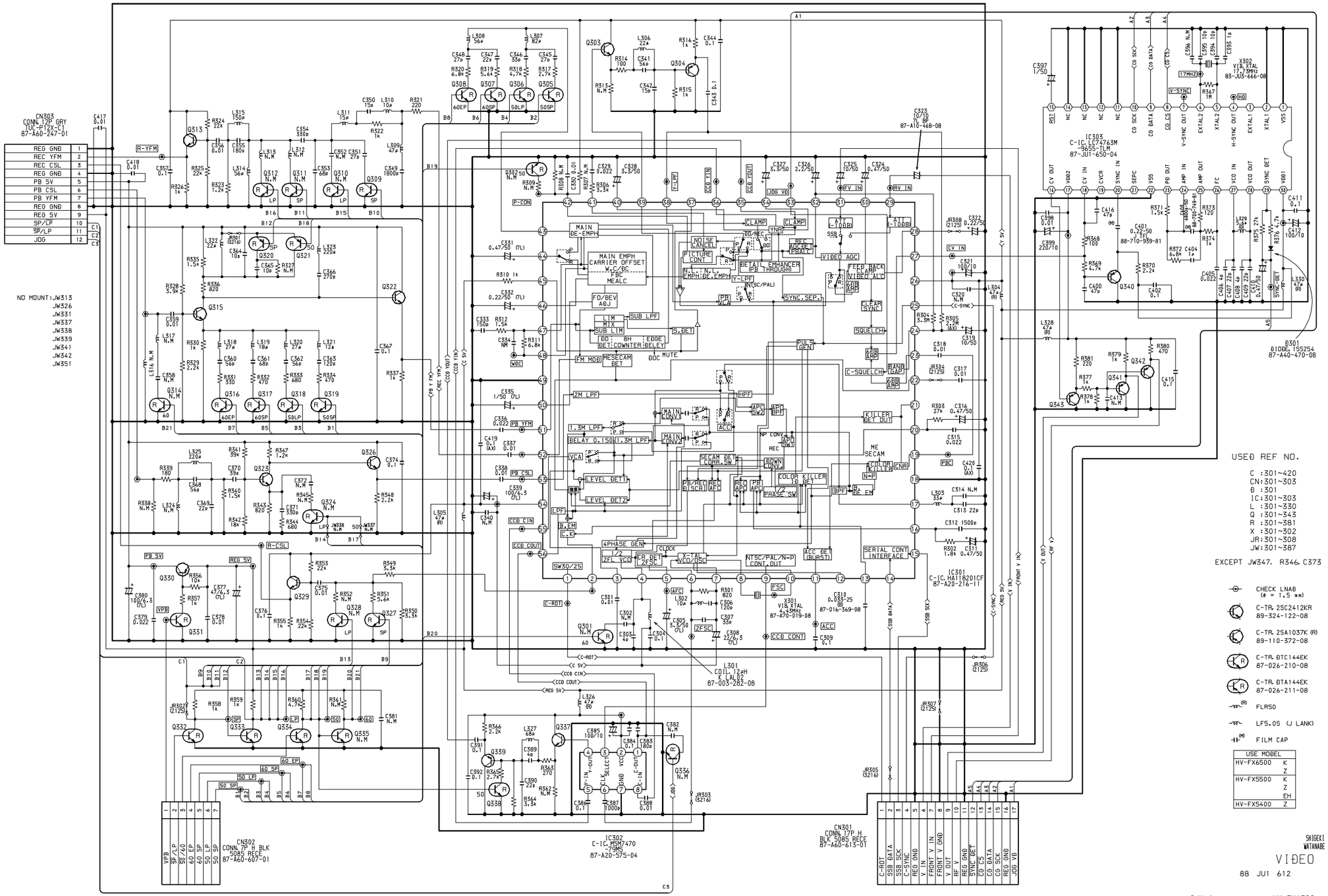

SCHEMATIC DIAGRAM – 11 (CANAL SECTION)

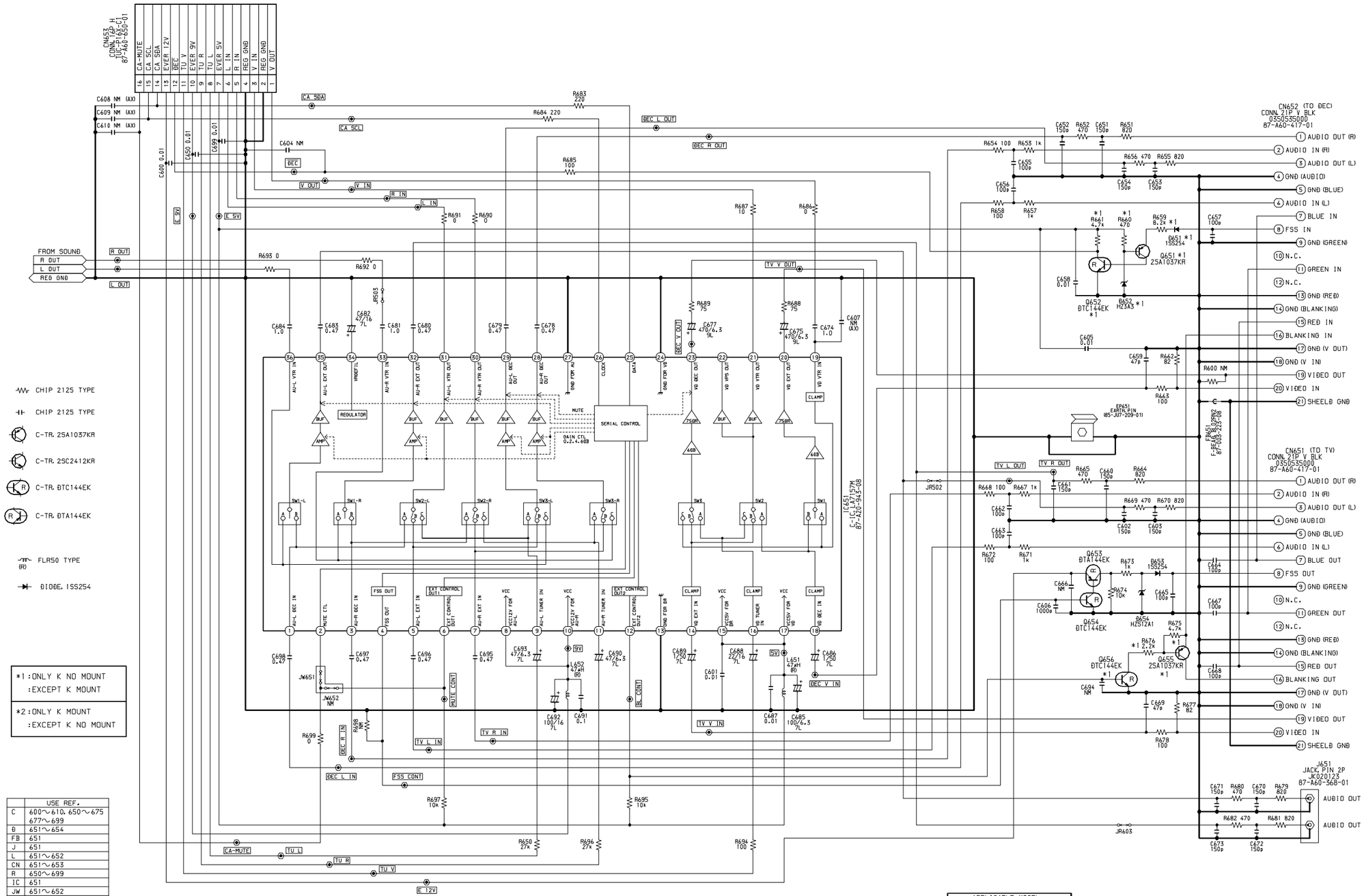

	USE REF.
C	600～610, 650～675 677～699
D	651～654
FB	651
J	651
L	651～652
CN	651～653
R	650～699
IC	651
JW	651～652
Q	651～656
EP	651
JR	601～603, 502～505

APPLICABLE MODEL	
HV-FX6500	K
HV-FX6500	Z
HV-FX6500	EH
HV-FX5500	K
HV-FX5500	Z
HV-FX5400	Z

TAKASHI WATANABE

CANAL

88 JU1 622 01

QC

B-8JU-1CA

8JU-1

HV-FX6500

SCHEMATIC DIAGRAM – 12 (DUAL SECTION)

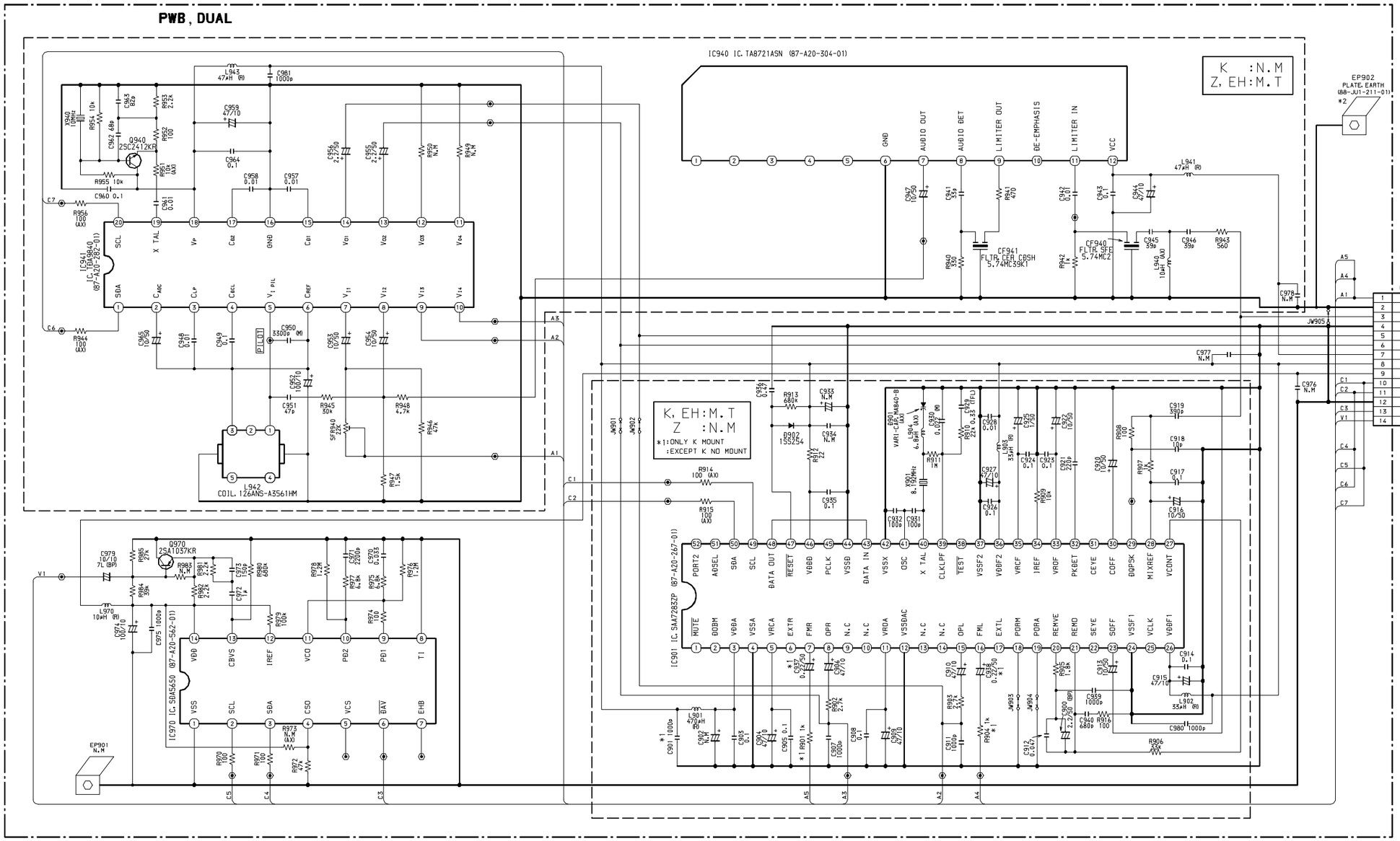

REFERENCE
R901 ~ R985
C900 ~ C981
L901 ~ L970
Q901 ~ Q970
IC901~IC970
D901 ~ D902
X901 ~ X940
CF940~ CF941
SFR940
CN901

C-RES.
C-CAP.
CAP. M
CAP. M TFL TYPE
CAP. E SME TYPE
COIL. FLR50 TYPE
COIL. LA02 TYPE
CHECK RANB ∅1.5

APPLICABLE MODEL
HV-FX6500K
HV-FX6500Z
HV-FX6500EH
HV-FX5500K
HV-FX5500Z
HV-FX5400Z

中田中田
DUAL
88 JU1 623

8JU-1 HV-FX6500

B-8JU-1DUAL

SCHEMATIC DIAGRAM – 13 (SOUND EFFECT SECTION)

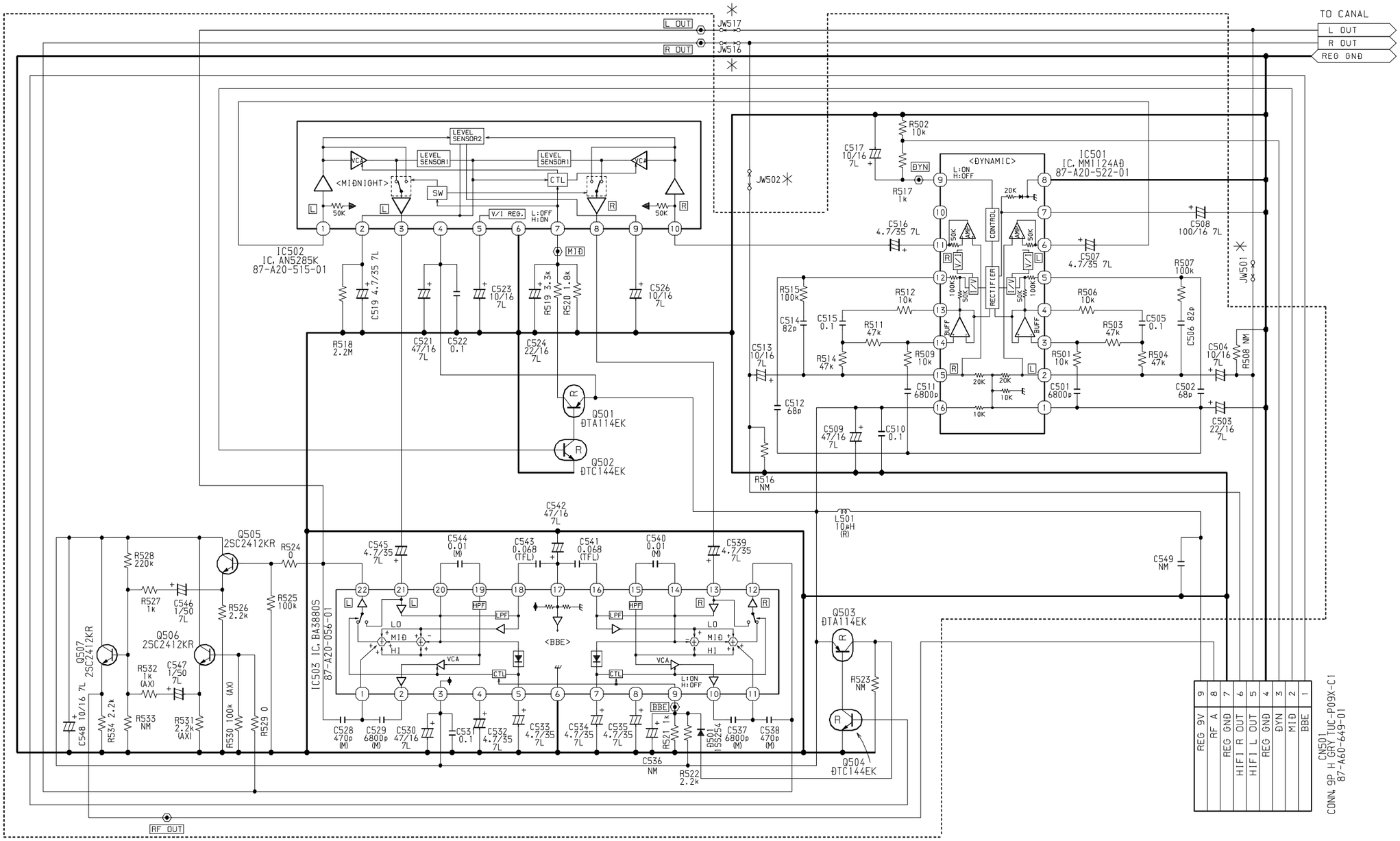

HV-FX6500 ONLY MT

＊ SELECT JUMPER	JW501 JW502	JW516 JW517
HV-FX6500	NM	MT
HV-FX5500 HV-FX5400	MT	NM

	USE REF.
C	501～504, 506～509 511, 512 514～548
R	501～548
Q	501～507

APPLICABLE MODEL
HV-FX6500 K
Z
EH
HV-FX5500 K
Z
HV-FX5400 Z

NEMOTO

EFFECT

88 JU1 622

B-8JU-1EFFECT

8JU-1

HV-FX6500

サービス技術ニュース	
番号	連絡内容
G－　－	
G－　－	
G－　－	

アイワ株式会社
AIWA CO.,LTD.

9820543,912204
Tokyo Japan

〒110-8710 東京都台東区池之端1-2-11 ☎03(3827)3111 (代表)

Printed in Singapore